RESTORATION HARDWARE

CHESTERFIELD FRAMED SLEIGH BED

PART LIST

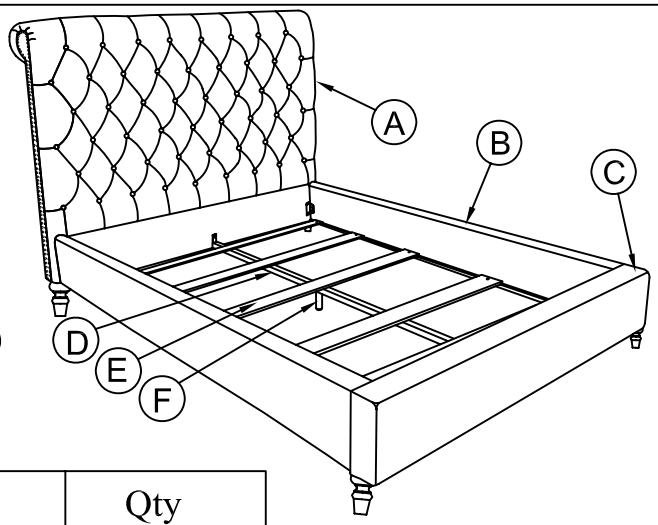

A [1]Headboard
B [2]Side Rail
C [1]Footboard
D [1]Center Support-slat
E [5]Cross Support Slat
F [1]Center Support Slat Foot(with adjustable glide)

Hardware List

No.	HARDWARE & PARTS ENCLOSED		Qty
1		Allen Key	1 pieces
2		Bolt Allen Head	2 pieces
3		Screw	10 pieces
***The hardwares are packed with the Headboard			

ASSEMBLY INSTRUCTION

Note:

- Bed must be assembled by at least two people.
- Please read instructions carefully before assembling bed.
- Use the above parts and fittings list to identify each component.
- Keep all packing materials until assembly is complete to avoid loss of smaller parts.

STEP 1:

1. Place the Headboar(A) on a flat floor covered with with a protective material to prevent damage to Headboard(A);
2. Stand The Headboard(A) upright and locate Side Rail(B) as shown in the diagram I;
3. Repeat the procedure with the Footboard.

STEP 2:

1. Locate the Center Support Foot(F) onto the Center Support Slat(D) as shown in the diagram II;
2. Attach the Center Support Slate(D) with "L" Shaped Bracket attached on ends onto the Headbaord(A) & Footboard(B) with a Bolt Allen Head(3), tighten with Allen Key(1), as shown in the diagram III ;
3. Place the Cross Support Slat(E) on the cleats on the inside of Side Rail(B), Screw(3) the ends of the slats to the cleats, as shown in diagram IV.

Diagram I

STEP 1

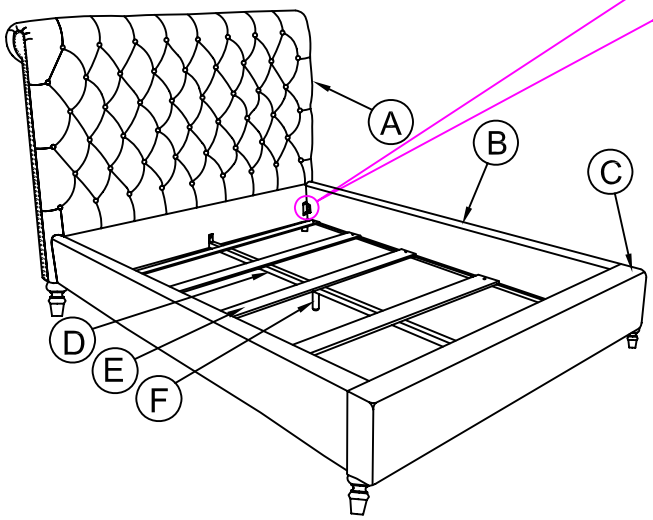

Diagram II

STEP 2

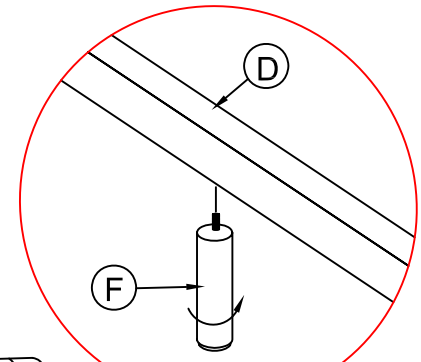

Diagram IV

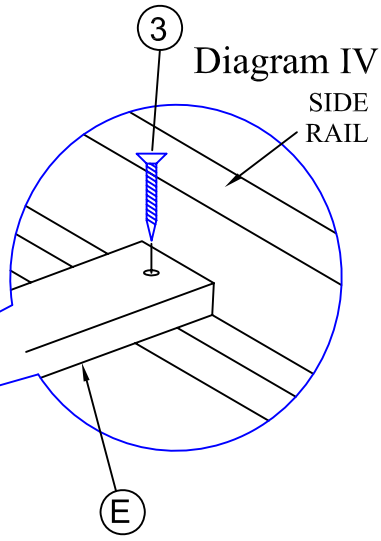

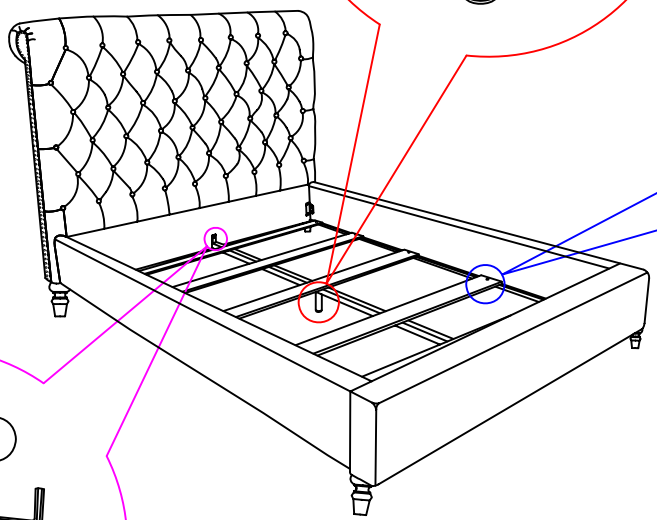

Diagram III

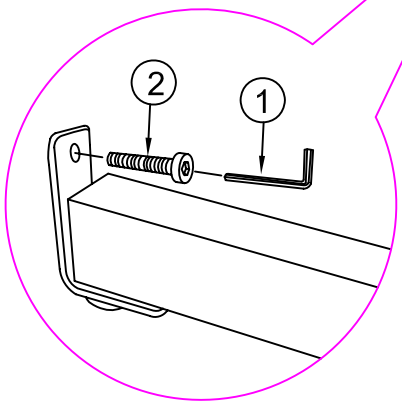

Thank you for your purchase
www.restorationhardware.com