RESTORATION HARDWARE

COPLEY PICTURE LIGHT SCONCE 29”

PARTS ENCLOSED

(A) Metal Anchor (2)
(B) Screws (2)
(C) Lamp Base (1)
(D) CFL Bulbs (4)
(E) Light Bulbs (4)
(F) Base Screws (4)
(G) Mounting Plate (1)
(H) Mounting Screws (2)

PORTABLE MOUNTING (Fig.1)

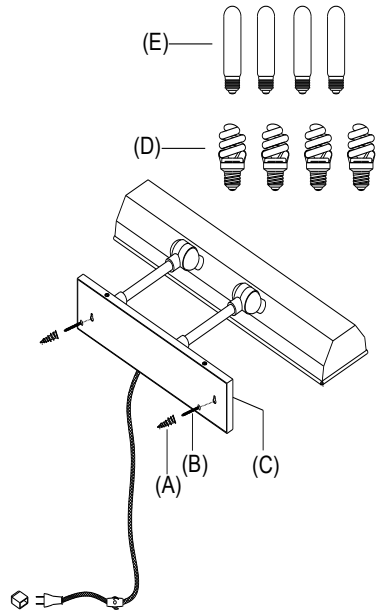

HARDWIRE MOUNTING (Fig.2)

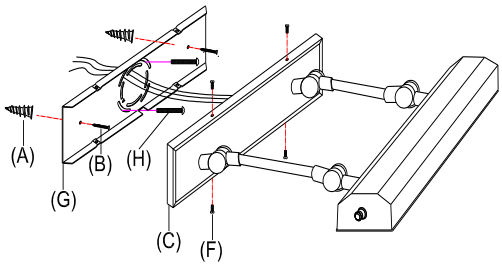

IMPORTANT SAFETY INSTRUCTIONS

For safety purposes, this lamp is equipped with a polarized plug (one blade is wider than the other). If the plug does not fit securely into outlet, do not force it - contact a professional electrician. Use the plug with an extension cord only if it can be fully inserted into the cord’s socket. Never alter the plug in any way.

This fixture has been rated for four (4) 25-watt maximum TYPE T bulbs (E) (included) OR four (4) 9-wattcompact fluorescent bulbs (D) (included). To avoid the risk of fire, do not exceed the recommended wattage.

WARNINGS

1. All wires are connected.
2. Do not remove the lamp from its packaging by pulling on the power cord, as a bad connection may result.
3. Do not connect electricity until your lamp is fully assembled.
4. To reduce the risk of fire, electrical shock, or personal injury, always turn off and unplug lamp and allow it to cool prior to replacing light bulb.
5. Do not touch bulb when fixture is turned on or look directly at lit bulb.
6. Keep flammable materials away from lit bulb.
7. This lighting fixture contains lead, a chemical known to the State of California to cause cancer, birth defects and other reproductive harm. Wash hands after installing, handling, cleaning or otherwise touching this light fixture.

TO ASSEMBLE

Portable Assembly - See Fig.1

1. Carefully remove all parts from the box and remove all plastic covering.
2. Measure center distance of both hanging key holes at backside of lamp base (C). Mark holes location on the wall with the same distance in desired height; make sure both holes are level with each other.
3. Drill small holes on each point locations on the wall, each hole should be large enough to accommodate the metal anchors (A). Push metal anchors into the holes in the wall.
4. Insert both mounting screws (B) into the metal anchors (A), make sure both screw heads with 1/8” threads are visible.
5. Hook lamp base (C) onto both heads of mounting screws (B).
6. Insert recommended Light Bulbs (included) into sockets.

Hardwire Assembly - See Fig.2

1. Follow step 1.2 &3 of PORTABLE ASSEMBLY.
2. Guide wiring from wall outlet through center the hole in mounting plate (G).Affix mounting plate (G) to wall outlet box, inserting screws (B) into metal anchors (A) and mounting screws (H) to secure mounting plate (G) to the wall.
3. Cut the wire twelve inches away from fixture base (C)
4. Attach the fixture ground wire and house ground wire (usually green insulation or bare wire) to wall outlet box with the green grounding screw. Connect fixtures to corresponding house wire with a wire nut. Carefully tuck the wires back into the outlet box. IT IS IMPERATIVE THAT THE OUTLET BOX IN YOUR HOME BE PROPERLY GROUNDED.
5. Connect both neutral wires (white wire) to the neutral outlet wire (usually white insulation) with a plastic wire connector and wrap the connection with electrical tape.
6. Connect both hot wires (black wire) to the hot outlet box wire (usually black insulation) with a plastic wire connector and wrap the connection with electrical tape. DO NOT REVERSE THE HOT AND NEUTRAL CONNECTIONS OTHERWISE SAFETY WILL BE COMPROMISED.
7. Attach fixture base (C) to affixed mounting plate (G) and secure with base screws (F).
8. Insert recommended Light Bulbs (included) into sockets.
9. Assembly is complete.

CARE INSTRUCTIONS

Avoid the use of all polishers, cleaners, and abrasives, as they will damage the finish of your lamp. To remove dust or fingerprints, wipe gently with a soft, clean cloth.