RESTORATION HARDWARE

Thank you for purchasing Restoration Hardware Lighting. Our assortment is crafted with the highest quality details in mind. Each item's surface is sealed which eliminates the need for polishing and ensures the lasting brilliance of your piece for years to come.

PARTS ENCLOSED:

(A) CROSS BAR
(B) CROSS BAR SCREW (2)
(C) THREADED TUBE
(D) CANOPY
(E) COLLAR
(F) HANG STRAIGHT
(G) QUICK LINK
(H) LOOP
(I) EXTENSION
(J) SHADE WASHER
(K) SHADE WASHER
(L) SPLIT WASHER
(M) TUBE
(N) SHADE
(O) TUBE
(P) WASHER
(Q) DIFFUSER
(R) FINIAL
(S) WIRE NUT (2)

BARREL SHADE PENDANT - LARGE

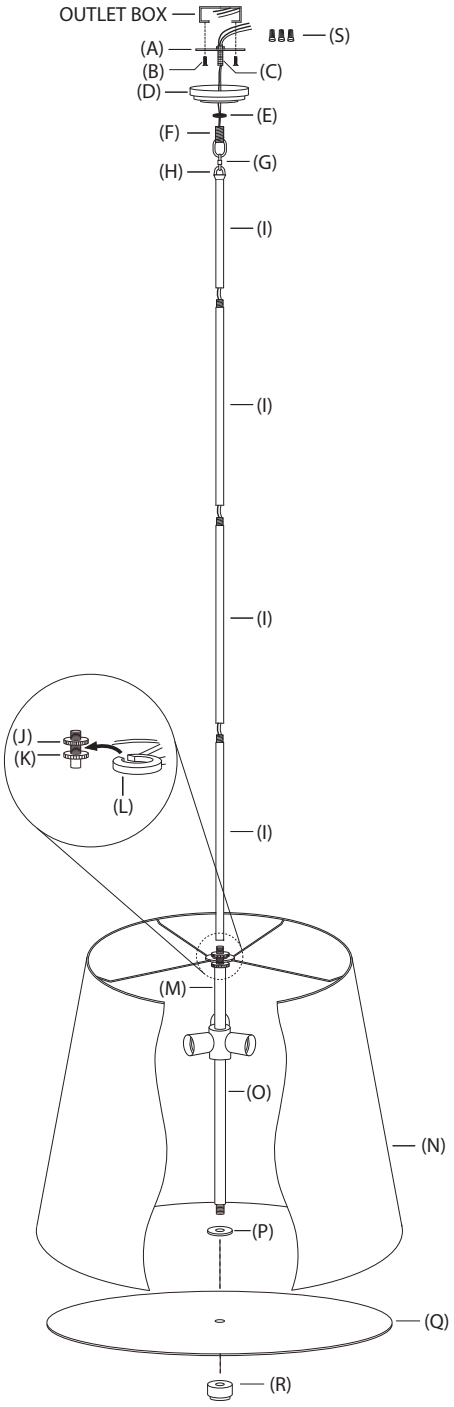

IMPORTANT SAFETY INSTRUCTIONS:

*These instructions are provided for your safety. It is very important that they are read completely before beginning the installation of your fixture.

*DIRECT WIRE FIXTURES: WE STRONGLY RECOMMEND INSTALLATION BY A LICENSED ELECTRICIAN.

*This fixture has been rated for up to (3) 100W MAX. Type A bulbs.

*To avoid risk of fire, do not exceed the recommended wattage.

WARNINGS:

*Turn off power (unplug from the wall outlet) before replacing the bulb(s), making sure the bulb(s) have sufficient time to cool down.

TO ASSEMBLE:

1. SHUT OFF THE MAIN ELECTRICAL SUPPLY AT FUSE BOX/ CIRCUIT BREAKER.
2. Remove all parts from carton. Do not throw away any parts. *DIFFUSER IS PACKED BENEATH CARDBOARD INSERT IN BOTTOM OF CARTON.*
3. Remove cross bar (A) from hang straight (F) by unthreading tube (C) from hang straight (F). Affix cross bar (A) (including threaded tube (C) to ceiling outlet box using cross bar screws (B) provided.
4. Measure desired drop for fixture to hang and add/remove extension tubes (I). Guide wiring through extension tubes before threading tubes together. **ADD/REMOVE EXTENSIONS: (Un)Thread the threaded nipple of one extension into the threaded opening of the next extension. Make sure wiring is pulled tight when threading extensions together to prevent damage to the wire**
5. Connect hang straight (F) and loop (H) with quick link (G).
6. Thread bottom extension tube (I) onto the threaded nipple at top of tube (M).
7. Unthread collar (E) from hang straight (F). Slide collar (E) and canopy (D) down hang straight (F), quick link (G) and extension tube (I). Let collar (E) and canopy (D) rest on shade washer (J).
8. Lift fixture to ceiling outlet box. Guide wiring through threaded tube (C). Thread hang straight (F) onto threaded tube (C).
9. Make proper electrical connection. A LICENSED ELECTRICIAN IS RECOMMENDED.
10. Attach ground wire from fixture (green or copper in color) to ground wire from outlet box. Fasten wires with wire nut (S) and tightly wrap connection with electrical tape.
11. Attach hot wire from fixture (black in color or smooth side of wire) to hot wire from outlet box. Fasten wires together with wire nut (S) and tightly wrap connection with electrical tape.
12. Attach neutral wire from fixture (white in color or ribbed side of wire) to neutral wire from outlet box. Fasten wires together with wire nut (S) and tightly wrap connection with electrical tape.
13. Slide canopy (D) up extension tubes (I) and hold firmly against ceiling. Slide collar (E) up extension tubes (I) and thread onto hang straight (F), securing canopy (D) against ceiling.
14. Lift shade (N) over bottom section of fixture. Slide split washer (L) between shade washer (J) and shade washer (K). Secure position of shade (N) by turning shade washer (J) clockwise until it rests firmly against split washer (L).
15. Install three (3) 100W MAX Type A medium base bulbs into sockets.
16. Thread washer (P) on to threaded nipple on tube (O).
17. Slide diffuser (Q) over threaded nipple on tube (O). Hold diffuser (Q) against washer (P).
18. Thread finial (R) onto exposed threads of nipple on tube (O) to secure position of washer (P) and diffuser (Q).
19. Reconnect electrical supply at fuse box/ circuit breaker and test fixture.

CARE INSTRUCTIONS:

To clean, use a soft cloth only. DO NOT use any chemical or abrasive cleaners.