TULIP FIREBOWL | **Installation Manual**

OUTDOOR FIREPIT BURNER MODELS CIR-18 & 18P

We recommend that our fire pits be installed and serviced by professionals that are certified in the U.S. by NFI (National Fireplace Institute)

Burner conforms to: ANSI Z21.97/CSA 2.41 - (2012/10/01) “Outdoor Decorative Gas Appliances”

DANGER - IF YOU SMELL GAS

1. **Shut off gas to the appliance.**
2. **Extinguish any open flame.**
3. **If odor continues, keep away from the appliance and immediately call your gas supplier or fire department.**

WARNING

Do not store or use gasoline or other flammable vapors and liquids in the vicinity of this or any other appliance. An LP-cyllinder not connected for use shall not be stored in the vicinity of this or any other appliance.

DANGER

CARBON MONOXIDE HAZARD

This appliance can produce carbon monoxide which has no odor.
Using it in an enclosed space can kill you.
Never use this appliance in an enclosed space such as a camper, tent, car or home.

WARNING:

Improper installation, adjustment, alteration, service or maintenance can cause injury or property damage. Read the installation, operating and maintenance instructions thoroughly before installing or servicing this equipment.

WARNING: FOR OUTDOOR USE ONLY!

INSTALLER: Leave this manual with the appliance. CONSUMER: Retain this manual for future reference

WARNINGS:

IMPORTANT: This appliance should be inspected before use and at least once annually by a qualified service person.
More frequent cleaning may be required as necessary. It is imperative that the control compartment, burners and circulating air passageways of the appliance be kept clean.

DANGER: Carbon monoxide poisoning can lead to death!

CARBON MONOXIDE POISONING:
Early signs of carbon monoxide poisoning resemble the flu, with symptoms including headache, dizziness, or nausea. If you experience these signs, the Fire Pit may not be working properly. **Get fresh air at once!** Have the Fire Pit serviced. Some people are more affected by carbon monoxide than others, including pregnant women, people with heart or lung disease or anemia, those under the influence of alcohol, and those at high altitudes.

NATURAL GAS AND PROPANE:
To assist in detecting leaks, an odorant has been added to natural gas and propane. However, this odorant can fade, and gas may be present even though no odor exists. Make certain you read and understand all warnings. Keep this manual for reference. It is your guide to safe and proper operation of this appliance.

WARNING: Any modification to this appliance or its controls can be dangerous.

1. This appliance, as supplied, is only for use with the type of gas indicated on the rating plate.
2. When this appliance is connected to a fixed piping system, the installation must conform to local codes, or in the absence of local codes, to the National Fuel Gas Code, ANSI Z223.1/NFPA 54, or the International Fuel Gas Code.
3. Keep the appliance area clear and free from combustible materials, gasoline and other flammable vapors and liquids
4. Do not burn solid fuel in this appliance. Do not use this appliance to cook food or to burn paper or other objects.
5. **Children and adults should be alerted to the hazards of high surface temperatures and should stay away to avoid burns or clothing ignition.**
6. **Clothing or other flammable materials should not be hung from the appliance, or placed on or near the appliance.**
7. **Young children should be carefully supervised when they are in the area of the appliance.**
8. Do not use the appliance if any part has been under water. Immediately call a qualified service technician to inspect the appliance and to replace any part of the control system and any gas control which has been under water.
9. Inspect the appliance before each use.
10. Turn the appliance off and let cool before servicing, installing, repairing or covering. **Any guard or other protective device removed for servicing the appliance must be replaced prior to operating the appliance. Only a qualified service person should install, service, or repair the appliance.**

HIGH ALTITUDE INSTALLATION

The appliance is rated for installations up to 4500’ (1372 m) above sea level. Above 4500’ the appliance must be derated at the factory for the appropriate altitude unless the local fuel is pre derated.

LOCAL CODES

Install and use your Outdoor Fire Pit with care. Follow local codes. In the absence of local codes, use the latest edition of The National Fuel Gas Code ANSI Z223.1/ NFPA 54 available from:

American National Standards Institute Inc.
1430 Broadway
New York NY 10018

National Fire Protection Association, Inc.
Batterymarch Park
Quincy MA 02269.

POSITIONING GAS SUPPLY

See page 8 of this manual for Gas Installation Requirements

The Tulip Firebowl has an open base through which you can bring a gas or propane line. See Fig. 1.

Please make sure that the gas line is located only within this area. This will ensure that the final position of the unit will not be compromised.

We recommend that gas risers be kept as low to grade as possible and no higher than 6” at their highest points.

Air gaps may be used to route surface-mounted propane hoses.

ATTENTION:

Gas line must be installed by a licensed contractor in compliance with local codes.

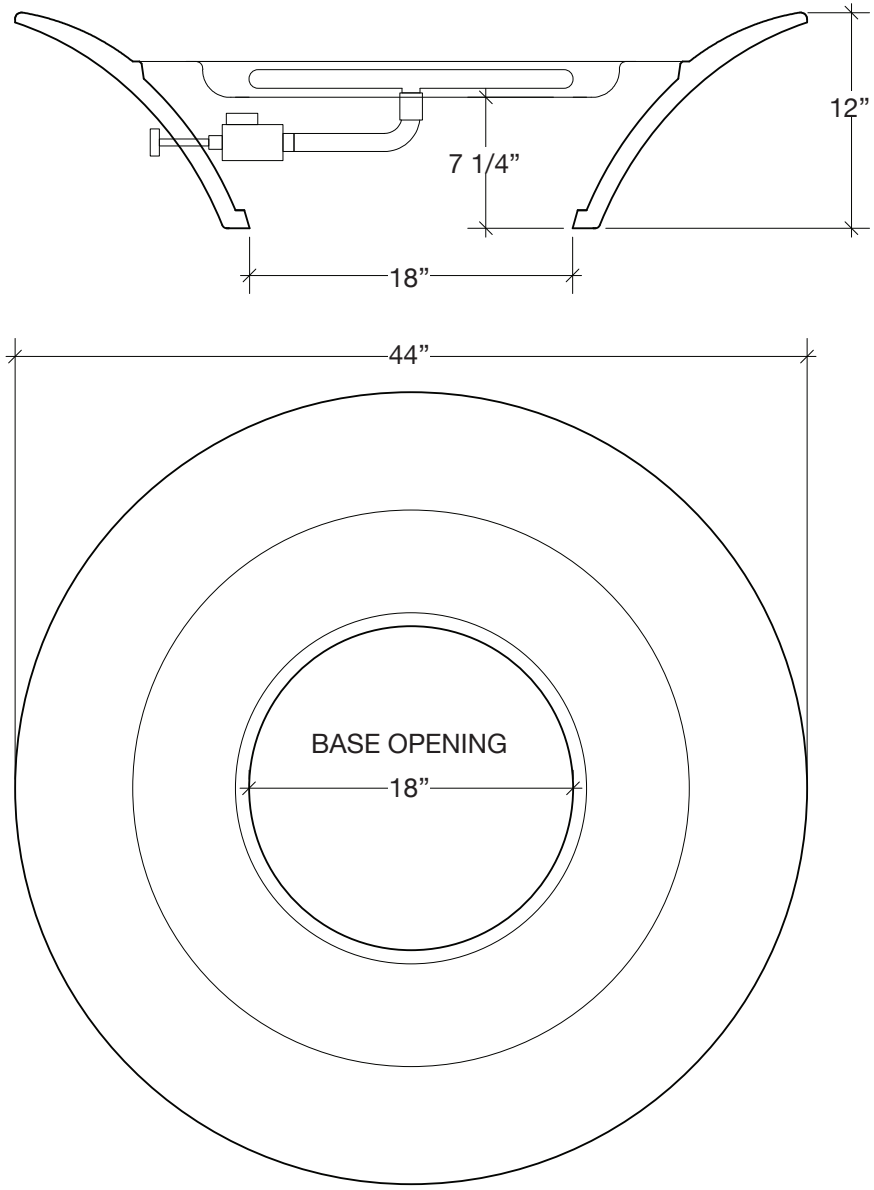

FIG 1. PLAN AND VERTICAL SECTION

PLACEMENT AND ASSEMBLY

CAUTION:

HEAVY: Use care when lifting and placing to avoid injury and damage to property and the fire pit itself. Fire pits may require 2 or more people to lift.

ATTENTION: Fragile! Cast concrete will chip if collided with other hard materials such as stone, metal, or other concrete. HANDLE WITH CARE!

1. Please refer to 'Clearances to Combustibles' guide on page 6 of this guide for placement.
2. Ensure that the final location for the fire pit is as flat and level as possible. Also provide adequate drainage beneath the opening in the base of the fire pit vessel. Do not block the air/drain gaps (7)
3. Completely unpack the fire pit. Some components may be packed inside the Tulip body.
4. Remove Burner Assembly (1) and Topping Ring (3) from fire pit vessel and carefully set aside.
5. Carefully lift the fire pit and place it in its final position. If there is a gas riser, fire pit vessel should be placed so that the stub is enclosed within the Tulip Body (4). If you are using a surface mounted propane hose, feed it through one of the air gaps (7).
6. If the Tulip Body does not sit level, shim appropriately so that it is level and evenly supported.
7. Connect to Natural Gas or Propane Source as per page 8 of this manual.
8. Assemble Burner as per instructions on page 7.
9. Check for leaks and test burner (see page 8)
10. Place Topping Ring (3) back into Body (4). Remove Control Knob (6) and stem from valve assembly. Align valve with Control Port (5). Place Burner Assembly (1) into Topping Ring.
11. Push Control Knob (6) back into valve.
12. Cover Topping Ring with lava rock following instructions on page 7.

COMPONENTS

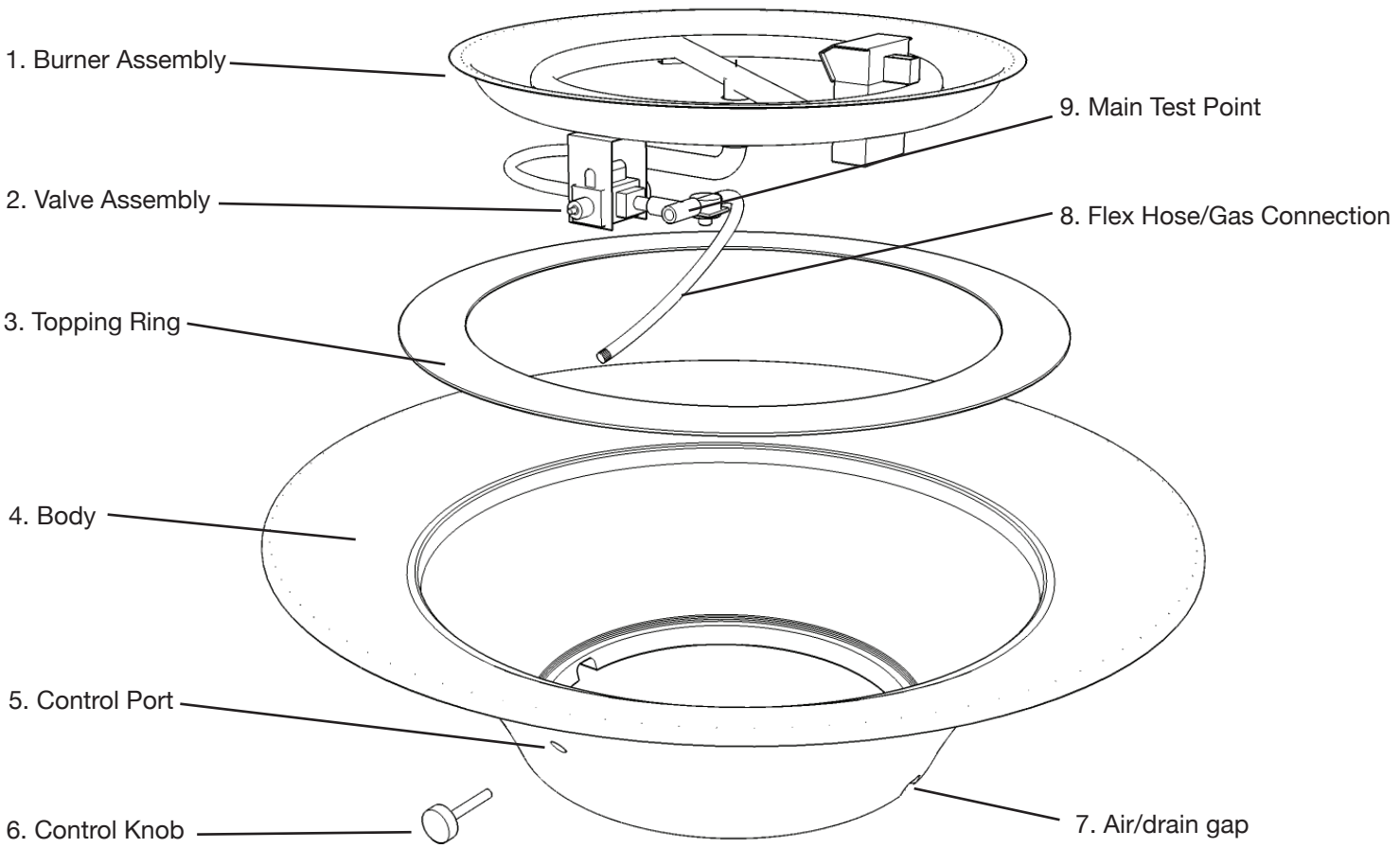

FIG 2. TULIP - EXPLODED VIEW

CLEARANCE TO COMBUSTIBLES

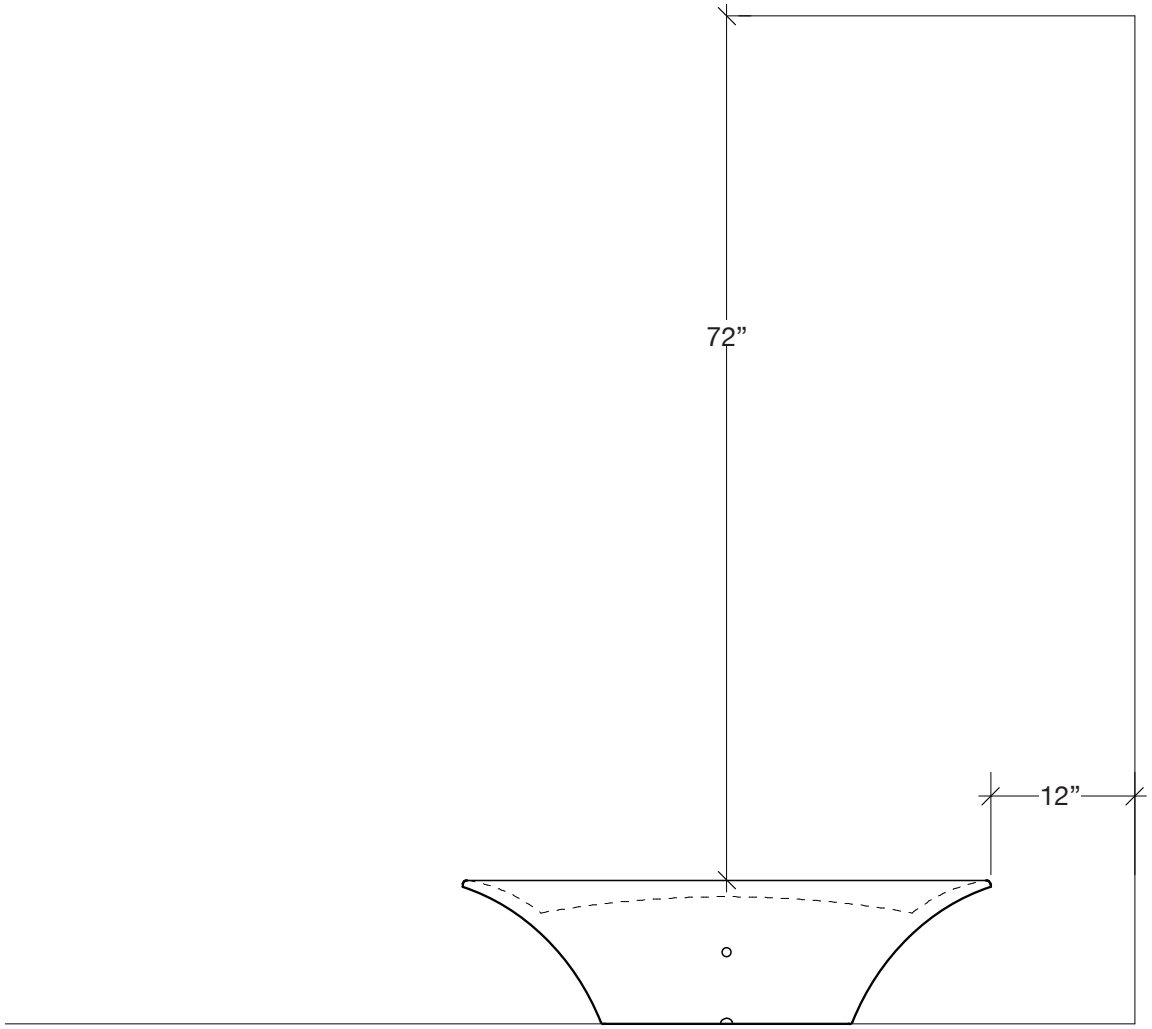

FIG 3. MINIMUM CLEARANCES TO COMBUSTIBLES

BURNER ASSEMBLY

WARNING:
Failure to position parts in accordance with these diagrams and instructions and/or failure to use parts specifically approved for use with this appliance may result in property damage or personal injury.

CAUTION:
Do not remove the metal data plates attached to the Outdoor Fire Pit Burner. These plates contain important information.

NOTICE:
Installation and repair should be done by a qualified service person. The appliance should be inspected before use and at least once annually by a qualified service person. More frequent cleaning may be required as necessary. It is imperative that control compartment, burner and circulating air passageways of the appliance be kept clean.

TO ASSEMBLE THE BURNER

1. Remove the Burner Assembly and Burner Media (lava rock) from packaging *(see Parts List on pg 15).*
2. Connect the Burner Assembly to the gas/propane supply using the supplied flex connector and following the instructions on page 8.
3. Carefully leak test all connections following the procedure on page 8.
4. Fill the burner pan evenly with burner media covering burner ring. Media should be level with the top rim of the pan. **Do not obstruct lighting port with burner media!**

5. Carefully lift the burner and place it in its housing. (*See page 4*)
6. Follow the Initial Lighting Instructions on page 10. **Make sure that the flame carries to all parts of the burner. Turn OFF the appliance and let it cool before proceeding to the next step.**
7. Place and evenly distribute remaining lava rock on top of burner and topping ring. **Keep the lighting port open and free of media.**

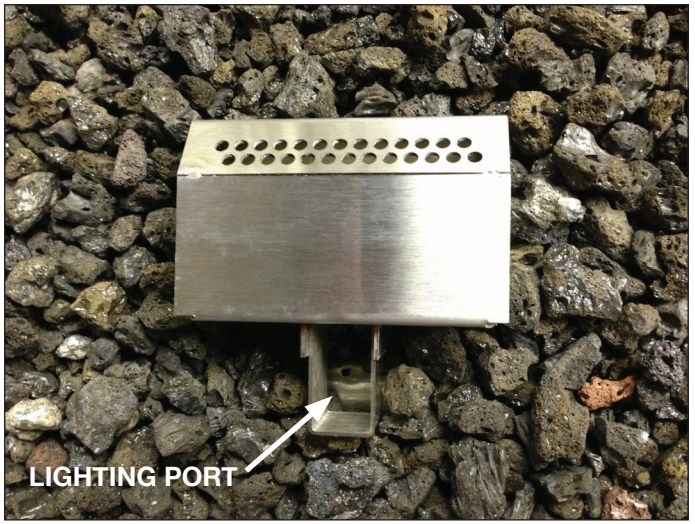

CONNECTING TO GAS SUPPLY

⚠ WARNING:

A qualified service person must connect the appliance to the gas supply. Follow all local codes.

CAUTION:
Use only new black iron or steel pipe. Internally tinned copper tubing may be used in certain areas. Use pipe of 1/2" diameter or greater to allow proper gas volume to Outdoor Fire Pit Burner. If pipe is too small, undue loss of pressure will occur.

INSTALLATION ITEMS NEEDED:
Before installing the Outdoor Fire Pit, make sure you have all items listed bellow:

- piping (check local codes)
- sealant
- manual shutoff valve
- adjustable (crescent) wrench or pliers
- sediment trap
- tee joints
- pipe wrench

INSTALLATION REQUIREMENTS

Installation must include a manual shutoff valve, union, and plugged 1/8" NPT tap. Locate NPT tap within reach for test gauge hook up. NPT tap must be upstream from the appliance.

Apply pipe joint sealant lightly to male threads. This will prevent excess sealant from going into pipe. Excess sealant in pipe could result in a clogged burner injector.

Install sediment trap in supply line as shown below. Locate sediment trap where it is within reach for cleaning and trapped matter is not likely to freeze.

A sediment trap prevents moisture and contaminants from entering the Outdoor Fire Pit controls. If a sediment trap is not installed, or is installed incorrectly, the unit may not work properly.

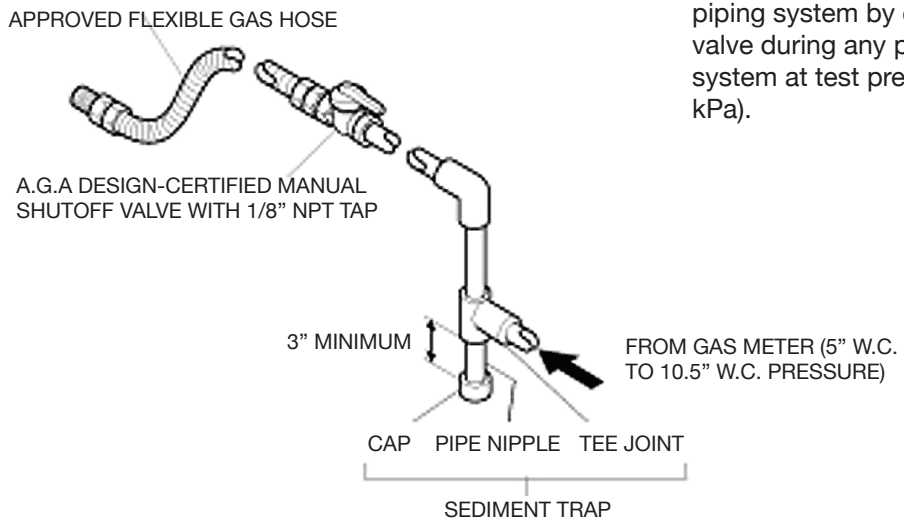

CHECKING GAS CONNECTION

⚠ WARNING: Test all gas piping and connections for leaks after installing or servicing. Correct all leaks immediately.

⚠ WARNING: Never use an open flame to check for a leak. Apply a mixture of liquid soap and water to all joints. Bubbles forming on joints while the gas is running indicate a leak. Correct all leaks at immediately.

Test Pressures in Excess Of 1/2 psi (3.5 kPa)
This appliance and its individual shutoff valve must be disconnected from the gas supply piping system during any pressure testing of that system at test pressures in excess of ½ psi (3.5 kPa).

Test Pressures Equal To or Less Than 1/2 psi (3.5 kPa)
This appliance must be isolated from the gas supply piping system by closing its individual manual shutoff valve during any pressure testing of the gas supply piping system at test pressures equal to or less than ½ psi (3.5 kPa).

TECHNICAL DATA

Burner Dimensions

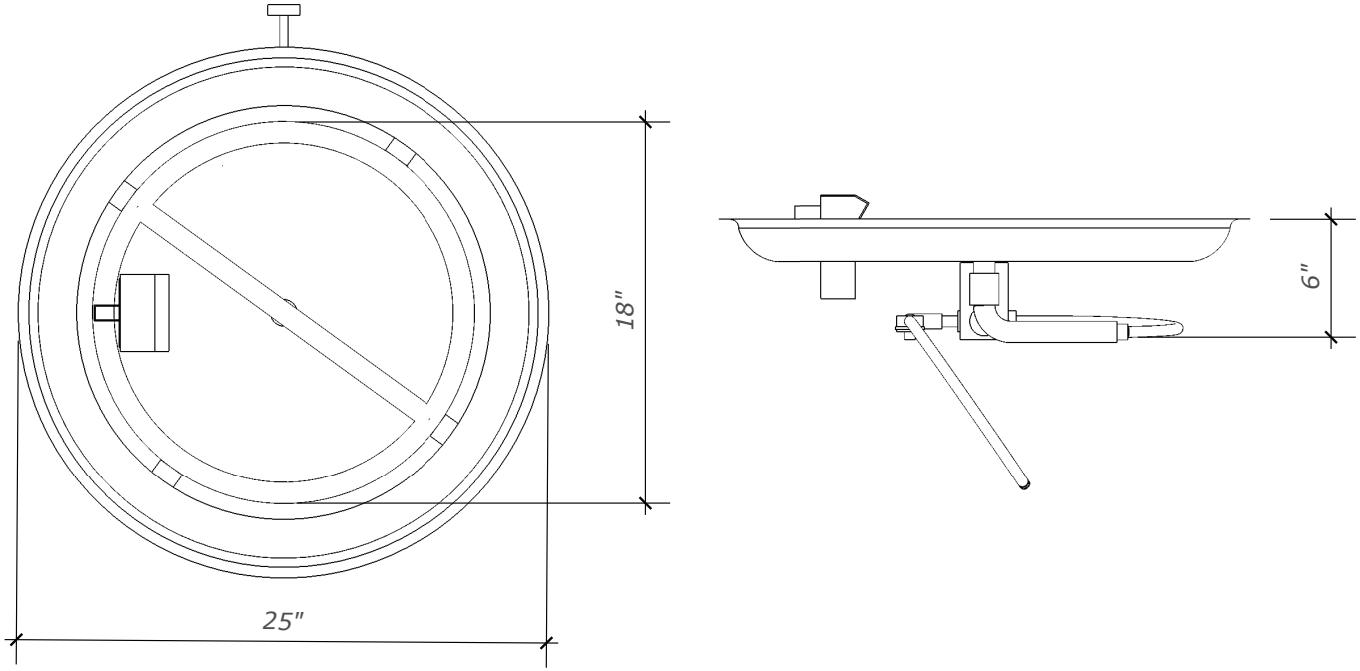

Burner Specifications

MODEL #	MAX INPUT Btu/Hr	INLET PRESSURE MIN	INLET PRESSURE MAX	MANIFOLD PRESSURE	ORIFICE SIZE	BURNER PORTS	PORT SIZE
CIR-18	70,000	4.5” W.C.	10.5” W.C.	3.5” W.C.	18	68	1/8”
CIR-18P	70,000	11.0” W.C.	13.0” W.C.	7.5” W.C.	37	68	1/8”

Minimum Clearances to Combustible Materials:

ABOVE	SIDE	BELOW
72”	18”	0”

LIGHTING YOUR FIRE PIT

WARNINGS:

Failure to follow these instructions exactly may result in fire or explosion causing property damage, personal injury or loss of life.

Before operating the appliance, check all around the appliance area and on the surrounding floor for the smell of gas - some gas is heavier than air and may settle on the floor in the event of a leak. IF YOU SMELL GAS, follow the safety instructions on page 1 of this manual.

The main gas valve in this appliance is not serviceable. Do not try to repair or modify the valve, as doing so may result in a fire or explosion. Call a qualified service technician if you have any safety concerns.

Do not use this appliance if any part of it has been under water. Immediately call a qualified service technician to inspect the appliance and to replace any part of the control system and any gas control that has been under water.

Improper installation, adjustment, alteration, service or maintenance can result in injury or property damage. For assistance or additional information, consult a qualified installer, service agency or the gas supplier.

Do not store or use gasoline or other flammable vapors or liquids in the vicinity of this appliance.

INITIAL LIGHTING INSTRUCTIONS

1. Purge air from the supply line as follows:
   - Open the main shutoff valve.
   - Unscrew the main pressure test point.
   - Leave the inlet test screw open until gas flows in.
   - When the gas is flowing, tighten the inlet screw immediately.
2. Test for leaks in each of the following locations:
   - The gas supply line connection to the main valve;
   - The Burner connections and pilot;
   - All joints on the valve and control body;
   - All field made joints and gas shutoff valves;
   - All factory made joints and connections.
3. You may check for gas leaks using one of the following methods only:
   - Soap and water solution. **WARNING: If using a soap and water solution to test for leaks, DO NOT spray the solution onto electronic parts;**
   - An approved leak testing spray;
   - An electronic sniffer. NOTE: Remove any excess pipe compound from connections if using this method, as the compound can set off electronic sniffers.

DANGER: NEVER USE AN OPEN FLAME TO CHECK FOR GAS LEAKS.

LIGHTING YOUR FIRE PIT

STOP!

Read the safety information on pages 1, 2 and 8 of this manual.

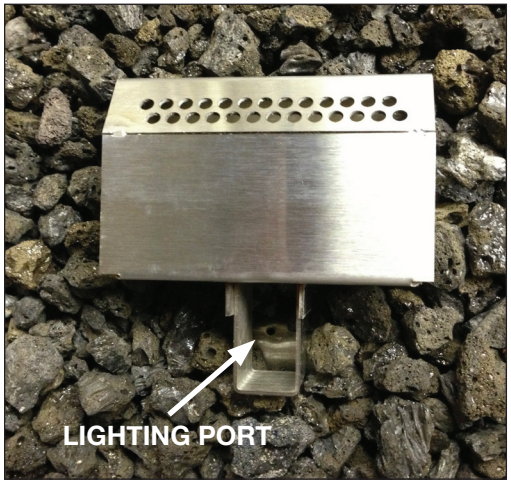

OPERATING INSTRUCTIONS

Use only your hand to push in or turn the gas control knob. Never use tools. If the knob will not push in or turn by hand, don't try to repair it, call a qualified service technician. Force or attempted repair may result in a fire or explosion.

1. Turn the gas control knob to the OFF position (it will be necessary to depress the knob slightly at the PILOT position). Allow five minutes for any gas in the vicinity to dissipate. (LP gas, which is heavier than air, may require forced ventilation).
2. Turn the gas control knob to the PILOT position.
3. Push down on the gas control knob and light the pilot immediately by applying a flame to the lighting port. Hold the knob down for one full minute after lighting the pilot.
4. When the gas control knob is released, the pilot flame should continue to burn (if the pilot goes out, repeat the above steps).
5. Rotate the gas control knob from PILOT to ON position (full counterclockwise position) to supply full flow to main burner.

NOTE: Not turning the gas control knob to the full ON position will reduce the flow and could result in poor ignition of main burner.

6. To extinguish main burner, rotate the gas control knob clockwise to the PILOT position.
7. To extinguish pilot, depress control knob slightly and turn to the OFF position (fully clockwise).

CLEANING AND MAINTENANCE

WARNING: Turn off gas before servicing fire pit. It is recommended that a qualified service technician perform these check-ups at the beginning of each fire pit season.

If any irregularities are apparent with operation. Please refer to Troubleshooting guide, pages 13-14.

BURNER ELEMENT AND PILOT

Keep the burner and pilot area clean by vacuuming or brushing at least twice a year. Make sure the burner porting and burner air openings are free of obstructions at all times.

Inspect area around the burner. Remove any lint or foreign material with a brush or vacuum cleaner.

The burner must be replaced prior to the appliance being put into operation if it evident that the burner is damaged.

PILOT FLAME

The flames from the pilot should be visually checked as soon as the unit is installed, and periodically during normal operation. The pilot flame must always be present when the fire pit is in operation. The pilot flame has two distinct flames: one engulfing the flame sensor, and the other reaching to the main burner.

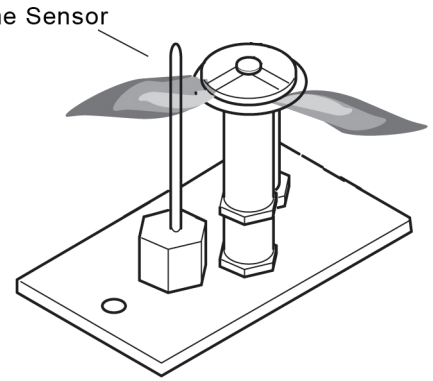

TROUBLESHOOTING

WARNING:

Turn off appliance and let cool before servicing. Only a qualified service person should service and repair this appliance.

IMPORTANT: Operating unit where impurities in air exist may create odors. Cleaning supplies, paint, paint remover, cigarette smoke, cements and glues, new carpet or textiles, etc., create fumes. These fumes may mix with combustion air and create odors. These odors will disappear over time.

OBSERVED PROBLEM	POSSIBLE CAUSE	REMEDY
Unit is smoking / sooting excessively. (Note: It is natural and unavoidable for appliance sets to produce moderate levels of carbon (soot) where flames contact the media.)	1. Poor fuel quality 2. Excessive flame impingement or blockage 3. Improper fuel/air mixture	1. Contact local natural gas company 2. Separate the stones to allow more flame passage 3. Remove any foreign items from the flame pattern and/or check for proper orifice sizing
Burner is excessively noisy (Note: The movement and combustion of gas will create low, unavoidable levels of noise.)	1. Passage of air/gas across irregular surfaces 2. Excessive gas pressure on natural gas units	1. Relieve any tight bends or kinks in gas supply line 2. Check/reset gas regulator pressure
Gas odor even when manual valve is in the OFF position	1. Gas leak. See Warning statement below. 2. Main gas valve defective.	1. Locate and correct all leaks *(see Checking Gas Connections, pg 5)* 2. Replace gas valve
Unit produces unwanted odors	1. Gas leak. See Warning statement below.	1. Locate and correct all leaks *(see Checking Gas Connections, pg 5)*

IF YOU SMELL GAS:

Shut off gas supply.
Do not try to light any appliance.
Do not touch any electrical switch; do not use any phone in the vicinity of the appliance.

Immediately call your gas supplier from a safe distance. Follow your gas supplier's instructions.

TROUBLESHOOTING cont'd

WARNING:

Turn off appliance and let cool before servicing. Only a qualified service person should service and repair this appliance.

OBSERVED PROBLEM	POSSIBLE CAUSE	REMEDY
Pilot cannot be lit	1. Gas supply turned off or manual shutoff valve closed	1. Turn off gas supply or open manual shutoff valve
	2. Air in gas lines when installed	2. Purge air from the supply line
	3. Pilot adjustment screw closed	3. Adjust pilot flame for approximately 1" blue flame
	4. Pilot is clogged	4. Clean pilot *(see Cleaning and Maintenance, page 12)* or replace pilot assembly
Burner does not light after pilot is lit	1. Burner orifice is clogged	1. Clean burner orifice
	2. Inlet gas pressure is too low	2. Contact local gas or propane supplier
	3. Burner orifice diameter is too small	3. Replace burner orifice
	4. Flame sensor lead loose or disconnected	4. Reconnect or tighten lead
Delayed burner ignition	1. Pilot flame needs adjusting	1. Adjust pilot for approximately 1" blue flame
Burner flame is too low	1. Incorrect gas supply or pressure	1. Check for proper gas supply pressure
	2. Blocked burner orifice or burner ports	2. Free burner orifice and burner ports of any burrs, paint, or other blockage
	3. Improper burner orifice size	3. Verify proper burner orifice sizing *(see page 9)*

ILLUSTRATED PARTS LIST

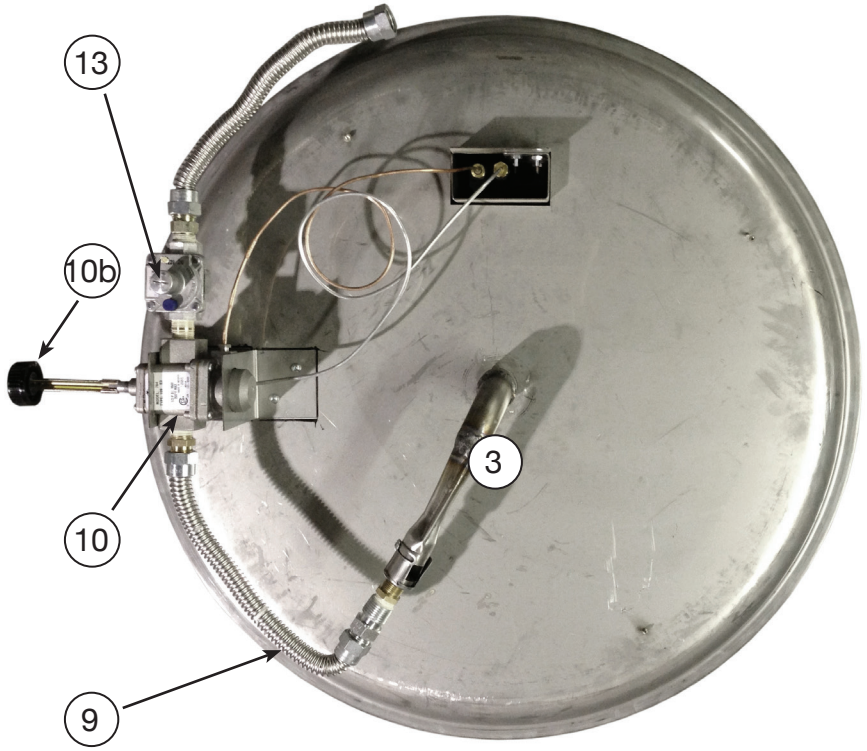

BOTTOM

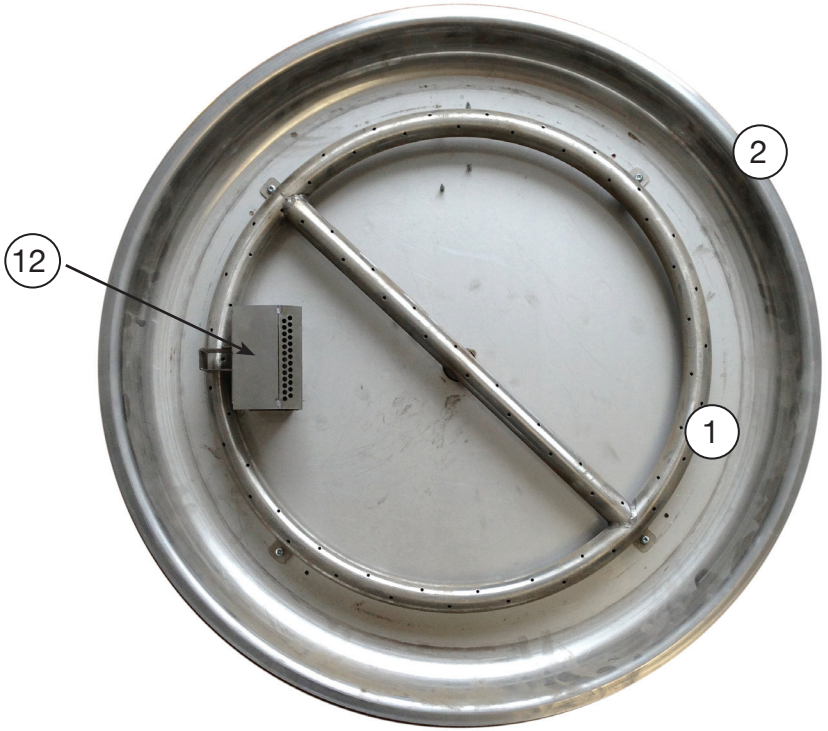

TOP

KEY #	DESCRIPTION	QTY	CIR-18	CIR-18P
1	Burner Assembly	1	RBP018	RBP018
2	Burner Pan	1	PAN025	PAN025
3	Venturi	1	VNG017	VLP017
4	Orifice	1	O33018	O33037
5	Lock Nut	1	LN111C	LN111C
6	3/8” FPT x 1/2” MFL Connector	1	CO488C	CO488C
7	3/8” MPT x 1/2” MFL Connector	2	CO468C	CO468C
8	3/8” Nipple Close	1	CO112C	CO112C
9	1/2” Flex Connector 10”	2	FC4810	FC4810

KEY #	DESCRIPTION	QTY	CIR-18	CIR-18P
10	Main Valve	1	VAE764	VAE764
10b	Control Knob			
11	Pilot Assembly	1	PNA388	PLP388
12	Pilot Shield	1	EPC011	EPC011
13	Regulator	1	RNG20L	RLP20L
14	Valve Bracket Set (2 pieces)	1	BRE764	BRE764
15	Burner Media - Glass (NG only)	1	GC3C18	
16	Burner Media - Lava Rock (LP only)	1		LA3C18

WARNING:
Failure to position parts in accordance with diagrams or failure to use parts specifically approved for this appliance may result in property damage or personal injury.
REPLACEMENT PARTS ARE AVAILABLE THROUGH THE MANUFACTURER

ILLUSTRATED PARTS LIST cont'd

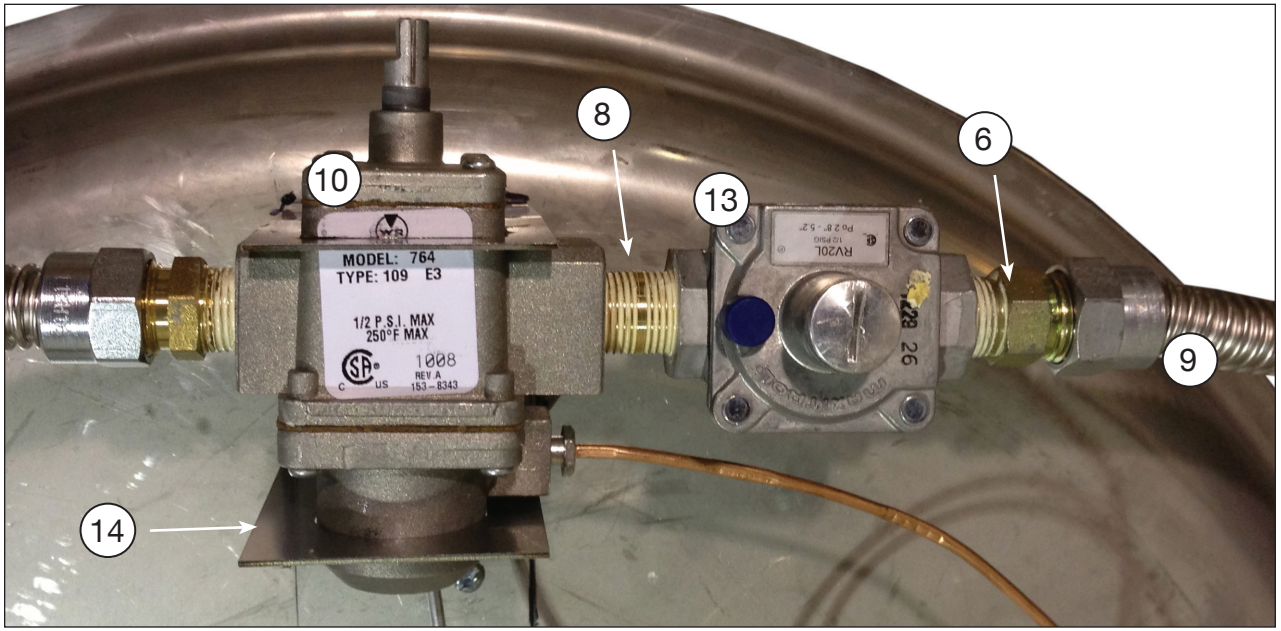

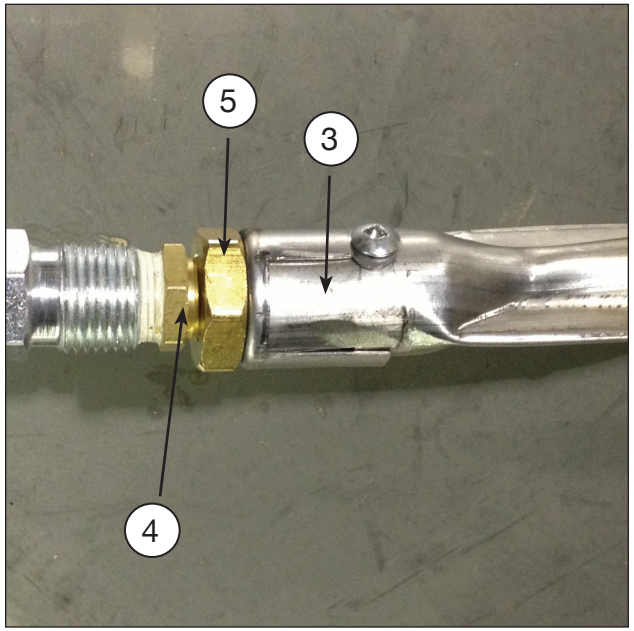

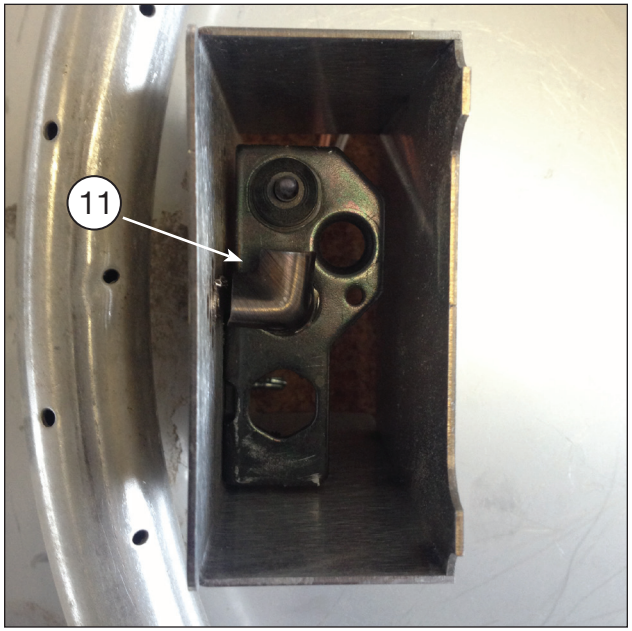

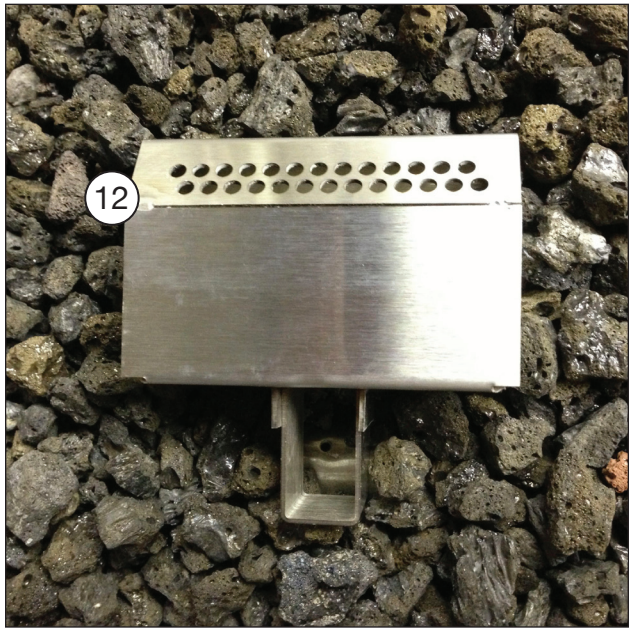

NOTES

WARRANTY INFORMATION

KEEP THIS FOR WARRANTY

MODEL: (circle one) **CIR-18**
CIR-18P

SERIAL NO: _____

DATE PURCHASED: _____

OUTDOOR FIRE PIT BURNER: LIMITED LIFETIME WARRANTY

The following components are warranted for life to the original owner, subject to proof of purchase:
BURNER 18 - Outdoor Fire Pit Burner - manufactured by Hevi Manufacturing Inc.

BASIC WARRANTY
Hevi Manufacturing Inc. warrants the components and materials in your appliance to be free from manufacturing and material defects for a period of one year from date of installation. After installation, if any of the components manufactured by Hevi Manufacturing Inc. in the appliance are found to be defective in materials or workmanship, Hevi Manufacturing Inc. will, at its option, replace or repair the defective components at no charge to the original owner. Hevi Manufacturing Inc. will also pay for reasonable labor cost incurred in replacing or repairing such components for a period of one year from date of installation. Any products presented for warranty repair must be accompanied by a dated proof of purchase.

This Limited Lifetime Warranty will be void if the appliance is not installed by a qualified installer in accordance with installation instructions. The Limited Lifetime Warranty will also be void if the appliance is not operated and maintained according to the operating instructions supplied with the appliance, and does not extend to (1) fire pit burner assembly damaged by accident, neglect, misuse, abuse, alterations, negligence of others, including the installation thereof by unqualified installers, (2) the costs of removal, reinstallation or transportation of defective parts on the appliance, or (3) incidental or consequential damage. All service work must be performed by an authorized service representative.

This warranty is expressly in lieu of other warranties, express or implied, including the warranty of merchantability of fitness for purpose and of all other obligations or liabilities. Hevi Manufacturing Inc. does not assume for it any other obligations or liabilities in connection with sale or use of the appliance. In states that do not allow limitations on how long an implied warranty lasts, or do not allow exclusion of indirect damage, those limitations of exclusions may not apply to you. You may also have additional right not covered in the Limited Lifetime Warranty. Hevi Manufacturing Inc. reserves the right to investigate any and all the claims against this Warranty and decide upon method of settlement. For information about this warranty contact:

Hevi Manufacturing Inc
7650 Kimbel Street
Units 22-27
Mississauga ON L6S 1B1
Canada