RESTORATION HARDWARE

20th C. FACTORY FILAMENT TRIPLE PENDANT

PARTS ENCLOSED

(A) Mounting plate (1)
(B) Mounting screws (2)
(C) Fixture base (1)
(D) Cap nuts (2)
(E) Light bulbs (3)

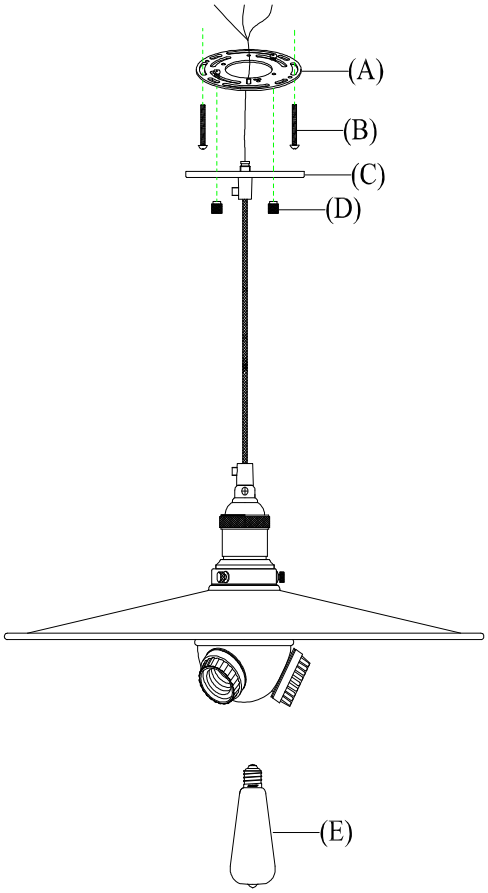

IMPORTANT SAFETY INSTRUCTIONS:

WE RECOMMEND INSTALLATION BY A LICENSED ELECTRICIAN.
This fixture has been rated for three (3) 40 watt maximum TYPE A standard bulbs (included in box) OR three (3) 13 watt Compact Fluorescent bulbs (not included). To avoid the risk of fire, do not exceed the recommended wattage.

WARNINGS:

1. All wires are connected.
2. Do not remove the lamp from its packaging by pulling on the power cord, as a bad connection may result.
3. Do not connect electricity until your lamp is fully assembled.
4. To reduce the risk of fire, electrical shock, or personal injury, always turn off and unplug lamp and allow it to cool prior to replacing light bulb.
5. Do not touch bulb when fixture is turned on or look directly at lit bulb.
6. Keep flammable materials away from lit bulb.
7. This lighting fixture contains lead, a chemical known to the State of California to cause cancer, birth defects and other reproductive harm. Wash hands after installing, handling, cleaning or otherwise touching this light fixture.

TO ASSEMBLE:

1. SHUT OFF THE MAIN ELECTRICAL SUPPLY FROM THE MAIN FUSE BOX/CIRCUIT BREAKER!
2. Carefully remove all parts from the box and remove all plastic covering.
3. Remove mounting plate (A) from the fixture base (C) by unscrewing cap nuts (D).
4. Affix mounting plate (A) to ceiling outlet box with mounting screws (B) provided.
5. Connect ground wire from the light fixture (green) to ground wire from ceiling outlet box (usually green or copper in color). Fasten together with a plastic wire connector provided and tightly wrap the wire connector with electrical tape so the end of the connector is sealed. IT IS IMPERATIVE THAT THE OUTLET BOX IN YOUR HOME BE PROPERLY GROUNDED.
6. Connect the neutral wire (white) to the neutral outlet wire (usually white) with a plastic wire connector and wrap the connection with electrical tape.
7. Repeat the procedure with the hot (black) wire to hot (usually black) outlet wire. Always make sure that no wire strands are left outside of the connections. DO NOT REVERSE THE HOT AND NEUTRAL CONNECTIONS OTHERWISE SAFETY WILL BE COMPROMISED.
8. Attach fixture base (C) to mounting plate (A), letting threaded rods pass through the holes on fixture base (C).
9. Replace cap nuts (D) on threaded rods to secure fixture base (C) to mounting plate (A).
10. Insert recommended bulbs into threaded sockets.
11. Restore power to outlet box and check operation of fixture.
12. Assembly is complete.

CARE INSTRUCTIONS:

Avoid the use of all polishers, cleaners, and abrasives, as they will damage the finish of your lamp. To remove dust or fingerprints, wipe gently with a soft, clean cloth.