RESTORATION HARDWARE

STORAGE & INSTALLATION OF YOUR MARBLE TOP

1. Storage

    1. Keep marble top in it's crate until installation.

    2. Store crate vertically in a place safe from being hit or knocked over

    3. Do not stack anything on top of the crate.

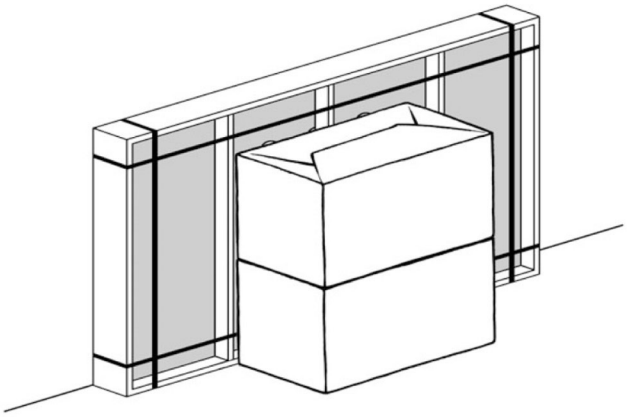

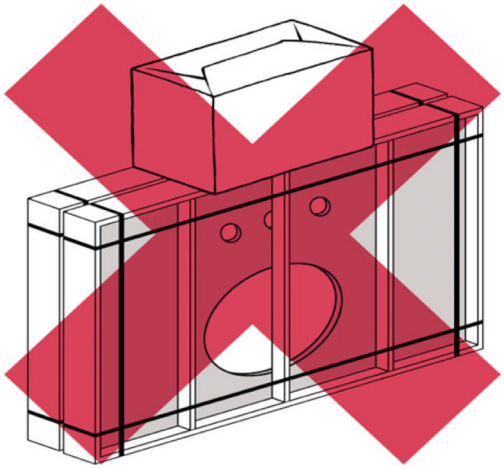

2. Opening crate

    1. Before unpacking make sure you have installation requirements present:
        1. A professional two man crew
        2. Sink base installed according to instructions with plumb wall and floor.
        3. Ensure the marble top is the correct one for the base.
        4. Tools and materials required:
            1. Flat, non-abrasive work surface, such as a blanket or smooth cardboard
            2. Carpenter's level
            3. Phillips head screwdriver
            4. Sealant

    2. Carefully, without allowing any free fall,
    rotate the crate from vertical to flat.
    This is the only time the crate should be horizontal.

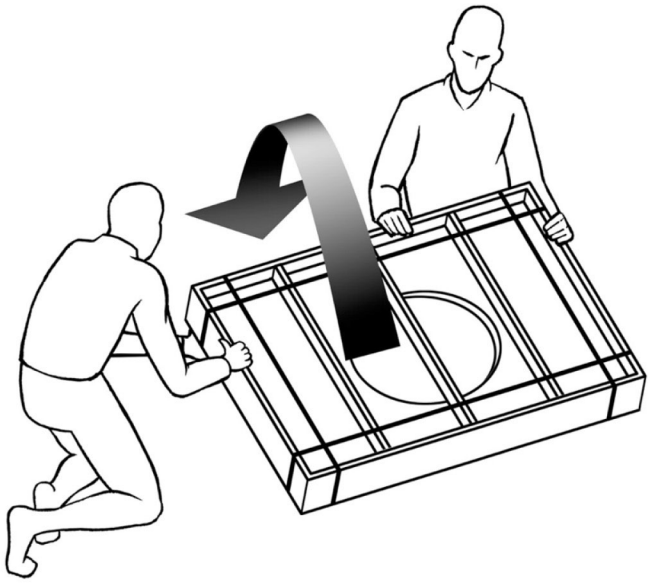

3. Remove metal bands

4. Unscrew the slats or lid and remove.

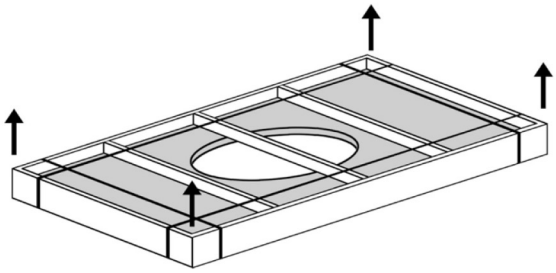

3. Examination of marble top

1. Examine the marble top for cracks or defects.

2. If defects are detected, please call 877-777-7059, do not install.

3. To clean the marble top, wipe with a soft cloth.

4. Installation of marble top

1. Always use a two man crew, a single person crew is much more likley to break or chip the marble top.

   Double tops might require a 3 man crew.

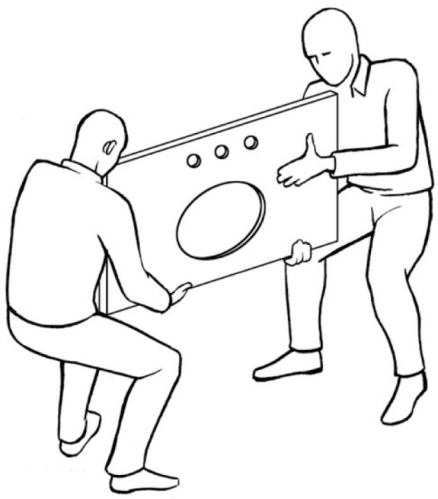

Caution! Installation between two walls requires special care.

2. Specific Instructions for installation between two walls

    1. Set top on it's edge at back of counter.

    2. Lower the front of the marble top to the sink base, making sure both ends come down at the same rate.

    3. Do not shimmie, twist or turn the top as you lower it. - risk of breakage!

If defects are detected please call 877-777-7059 - do not install.

HUTTON SINGLE WIDE VANITY SINK ASSEMBLY INSTRUCTIONS

Before You Begin:

Professional installation by two-person crew is required for this fixture. Install water supply and drain piping according to local plumbing and building codes. Insure that wall and floor are square and plumb at site of installation.

Tools and Materials Required:

1. Flat, nonabrasive work surface such as a blanket or smooth cardboard
2. Carpenter's level
3. Phillips head screwdriver
4. Sealant

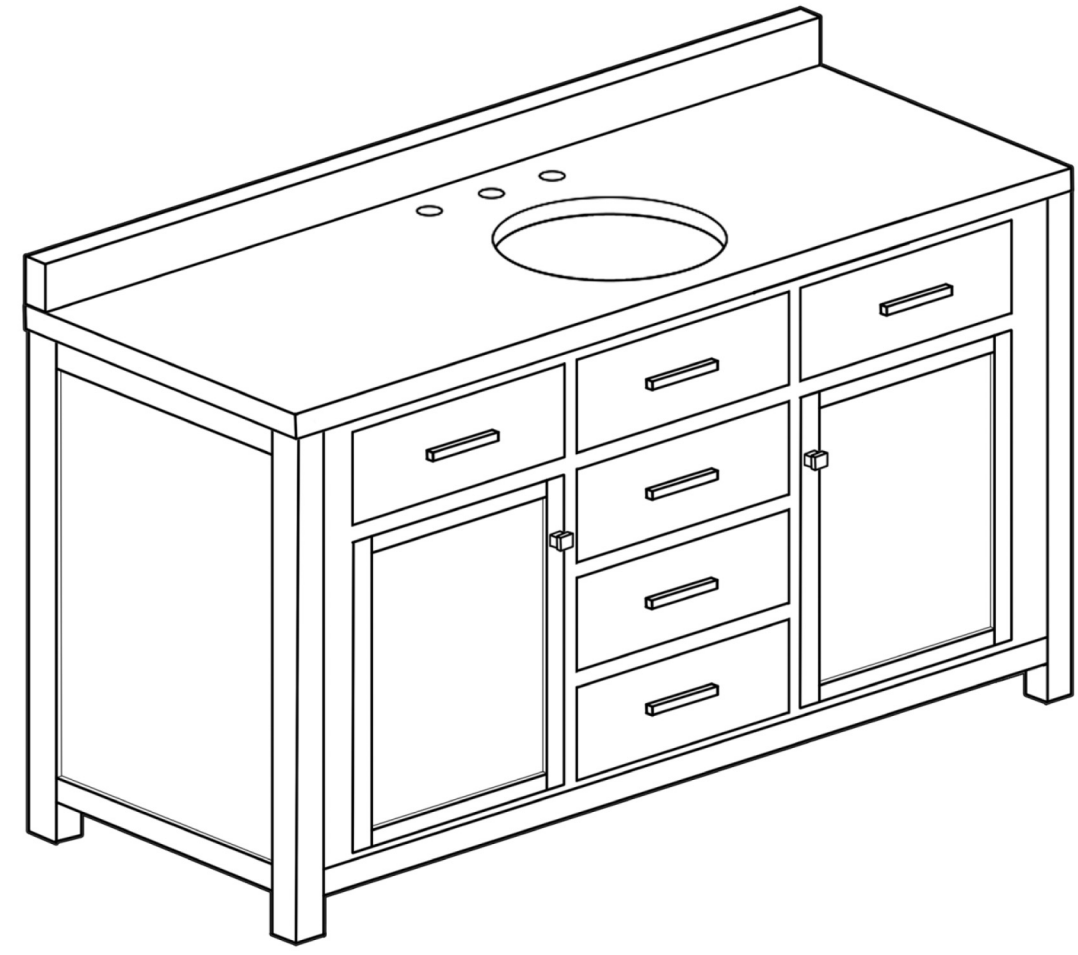

ASSEMBLED SINK

Parts List

A. Stone top (sold separately)

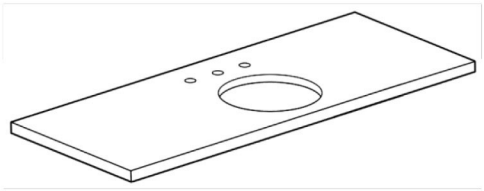

B. Backsplash (included with stone top)

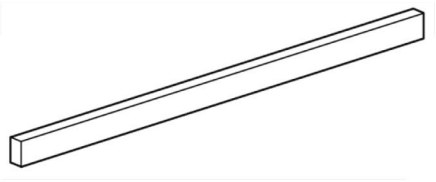

C. Lavatory basin

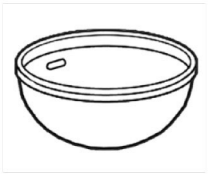

D. Vanity

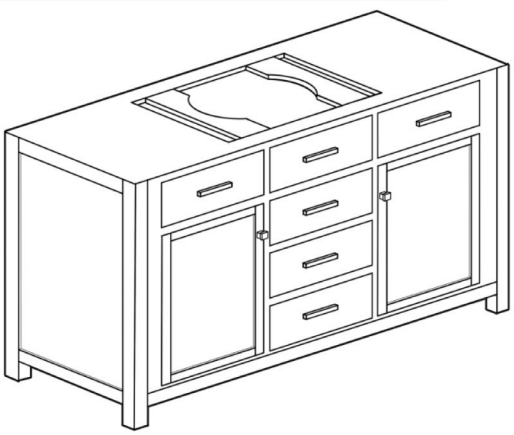

Assembly Instructions:

1. Place the basin (C) on the support bars of vanity (D). Overflow of lavatory basin should be on same side as pre-drilled faucet holes on stone top. (See Illustration.)

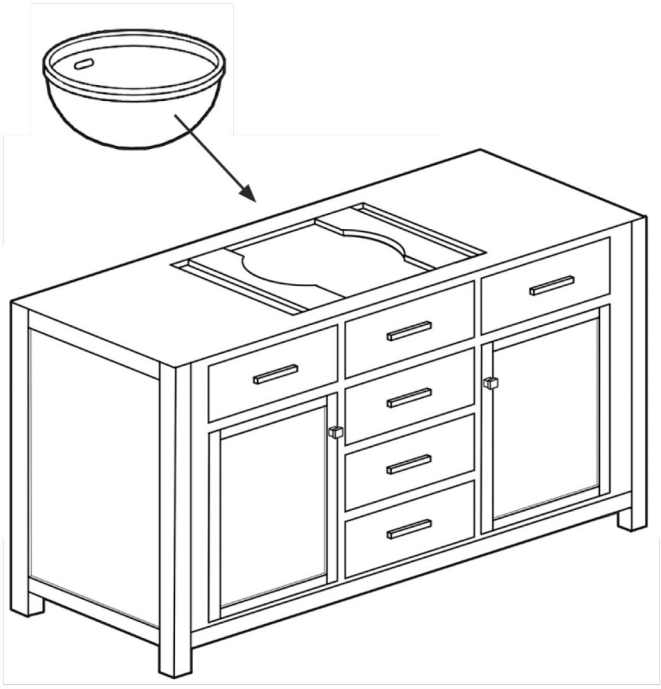

2. Remove screws and back panel when installing faucet to sink. (See Illustration.) Back panel can be discarded or reattached with cutouts to accommodate plumbing.

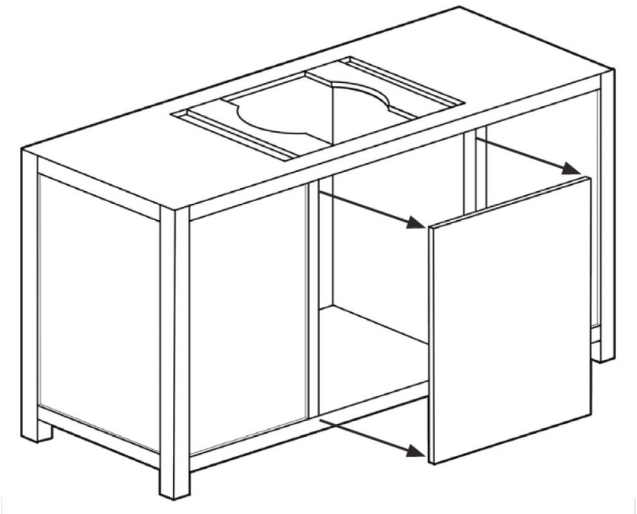

3. Apply a continuous bead of sealant to the top surface of rim of lavatory basin where it will contact underside of stone top.
4. Using two people lift stone top (A), and carefully place it in position on top of washstand base.
5. Apply silicone sealant to bottom and back of backsplash (B) and attach to wall and marble top.
6. Adjust leveling foot as need for the stability of the console. (See Illustration.)

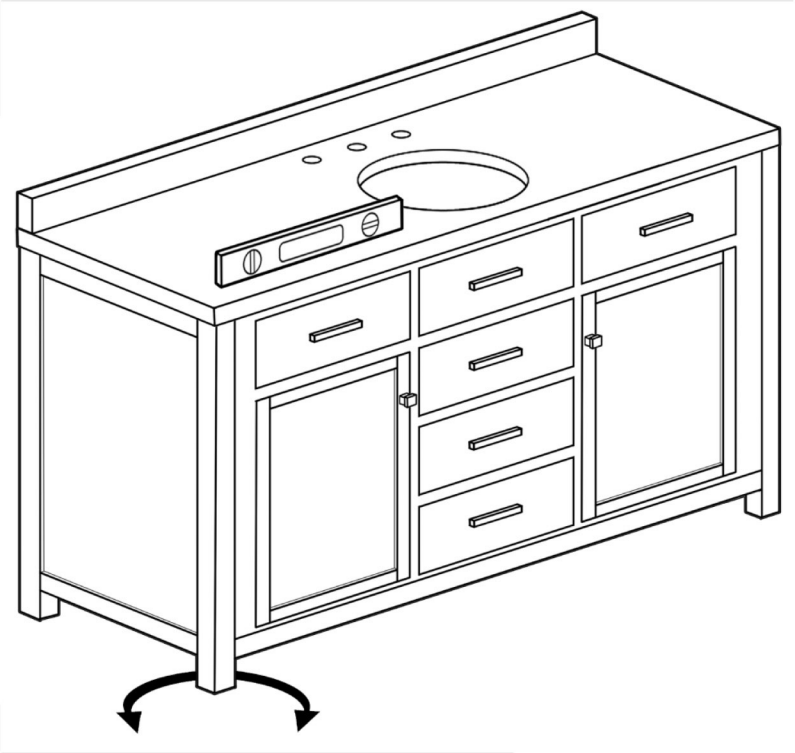

Cleaning and Maintenance Instructions:

Avoid abrasive and harsh chemical cleaners.

To maintain and protect luster of vanity sink components, Restoration Hardware Bathroom Cleaning Products are recommended.

Restoration Hardware natural stone tops have a honed finish and hand-polished edges. They are sealed twice before shipment with inert silicone sealant. For cleaning and maintenance, Restoration Hardware Stone Care Products are recommended. To maintain your natural stone top, reseal it once a year.

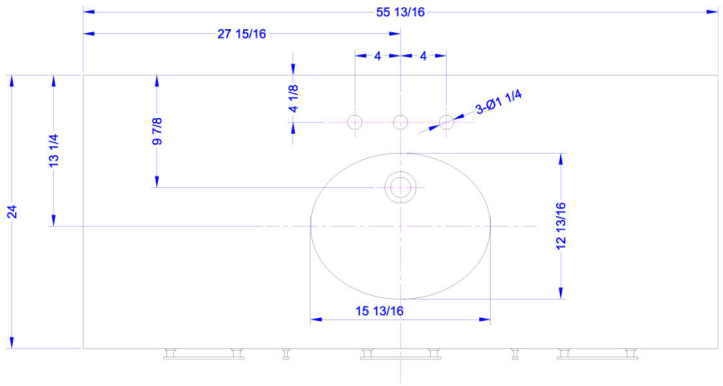

TOP VIEW

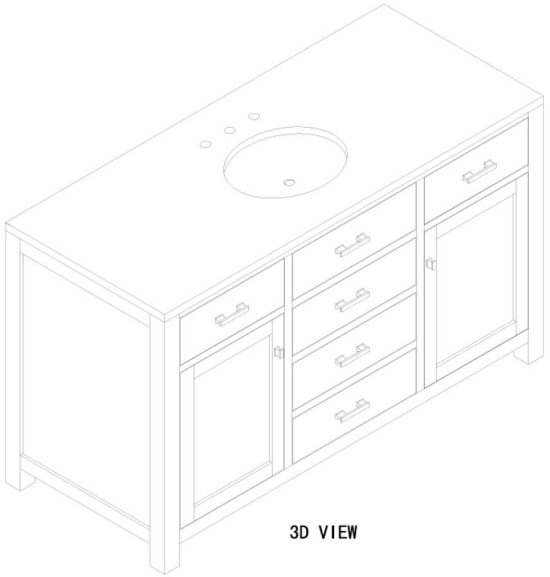

3D VIEW

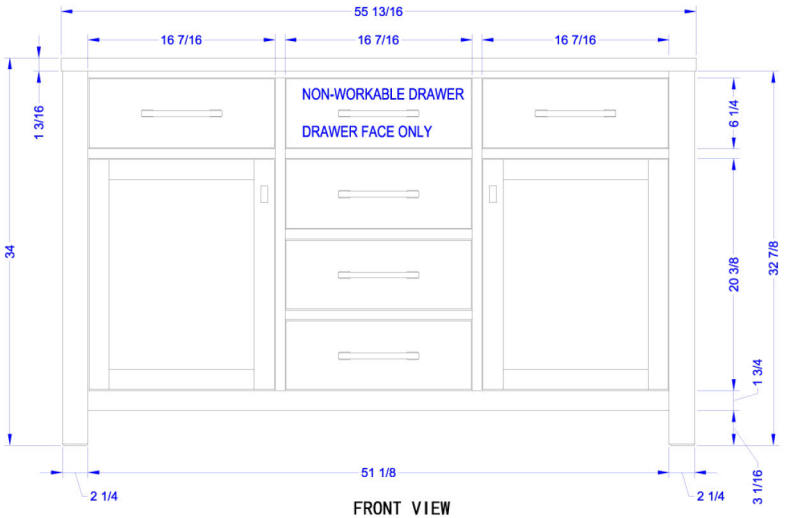

FRONT VIEW

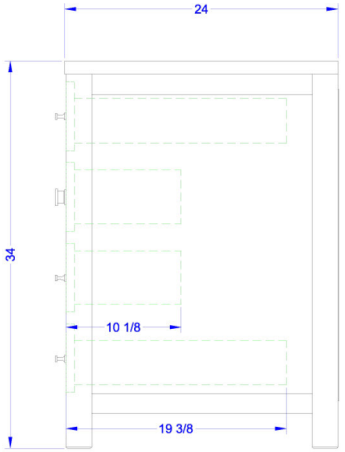

SIDE VIEW

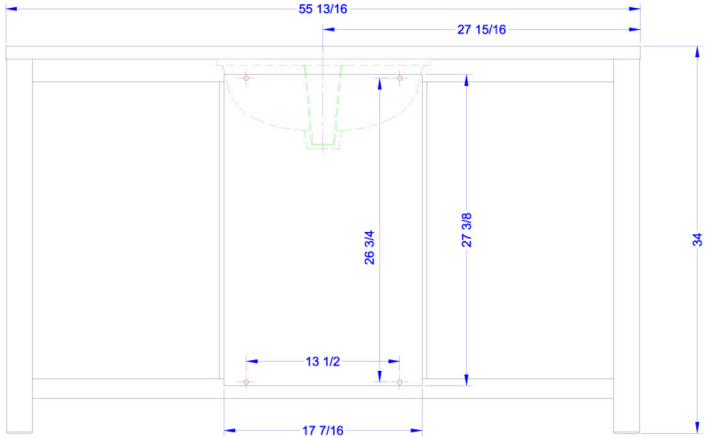

BACK VIEW

HUTTON SINGLE WIDE ENCLOSED CONSOLE

DRAWINGS REPRESENT ORIGINAL DESIGN SPECIFICATIONS. ACTUAL PRODUCT DIMENSIONS MY VARY SLIGHTLY.
ALL DIMENSIONS ARE REPRESENTED IN INCHES.
PROFESSIONAL INSTALLATION REQUIRED

Unless otherwise noted, all design and content, images, artwork, graphics, photography, text, and the like are copyrights, trademarks, trade dress,and/or intellectual property that are owned, controlled, or licensed by Restoration Hardware.

RESTORATION HARDWARE

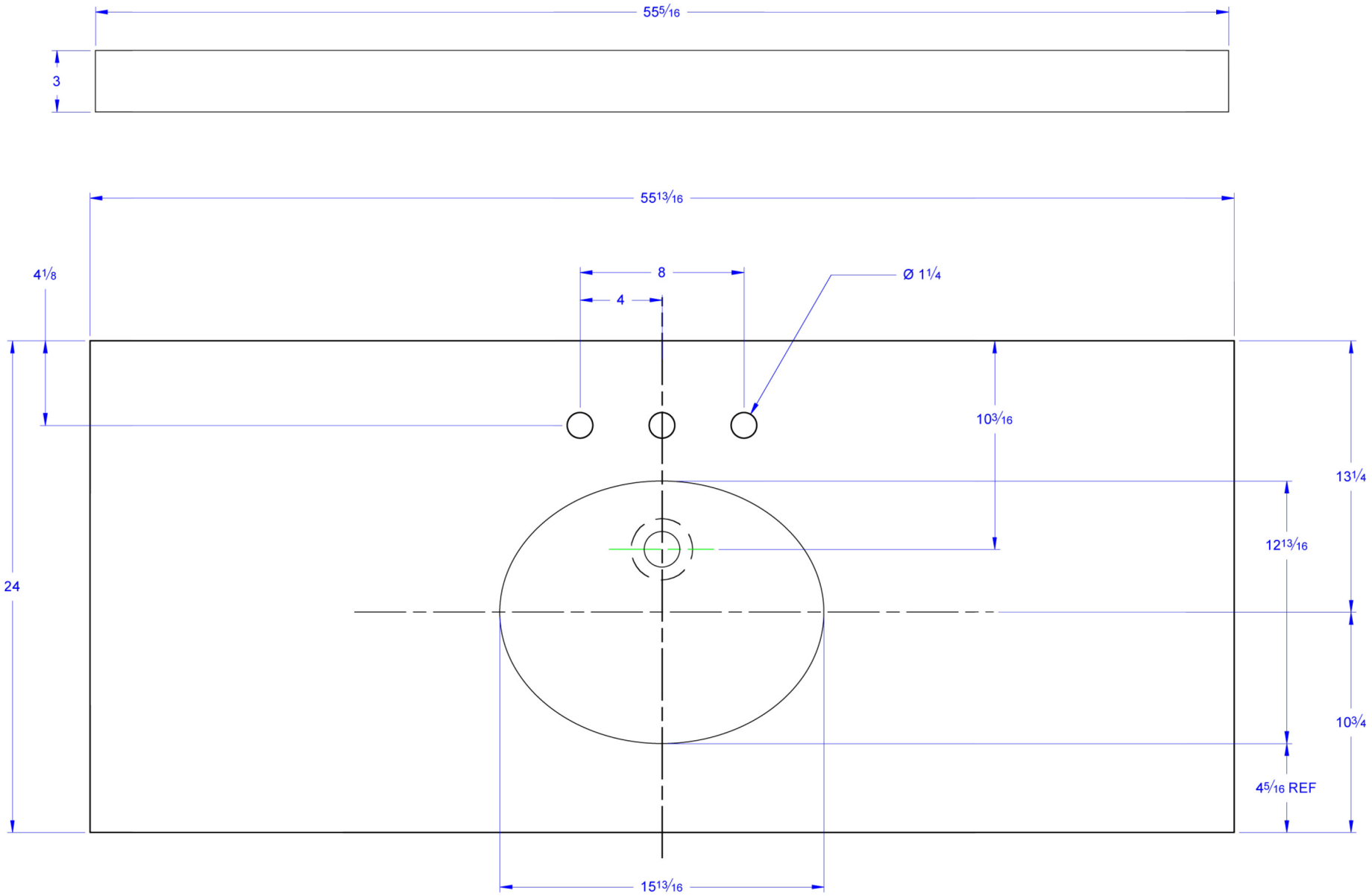

Hutton Single Wide
Note: Stone is 1 1/4" thick.

HUTTON SINGLE WIDE SINK TOP

DRAWINGS REPRESENT ORIGINAL DESIGN SPECIFICATIONS. ACTUAL PRODUCT DIMENSIONS MY VARY SLIGHTLY.
ALL DIMENSIONS ARE REPRESENTED IN INCHES.
PROFESSIONAL INSTALLATION REQUIRED

Unless otherwise noted, all design and content, images, artwork, graphics, photography, text, and the like are copyrights, trademarks, trade dress,and/or intellectual property that are owned, controlled, or licensed by Restoration Hardware.

RESTORATION HARDWARE

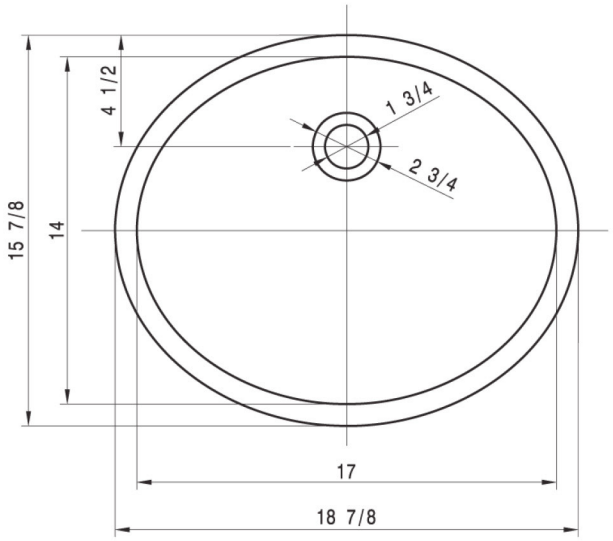

TOP VIEW

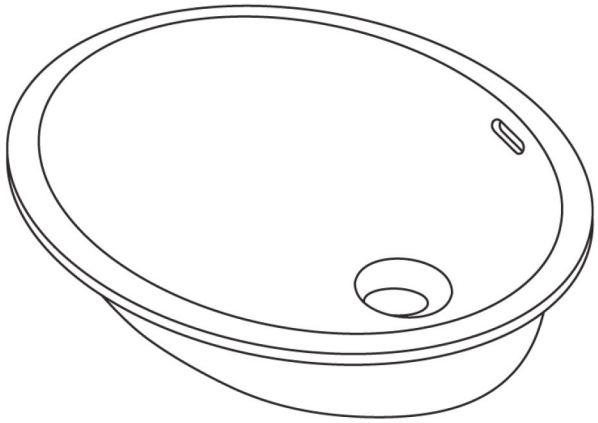

3D VIEW

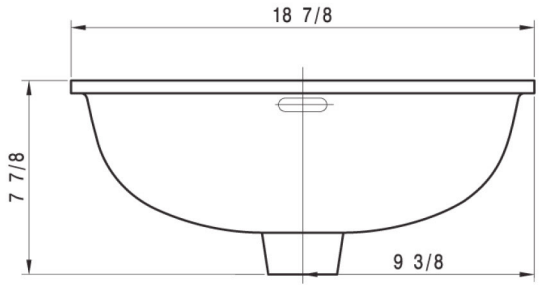

FRONT
VIEW

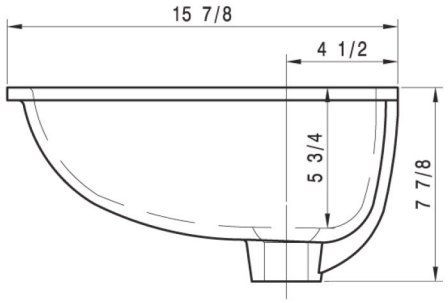

SIDE
VIEW

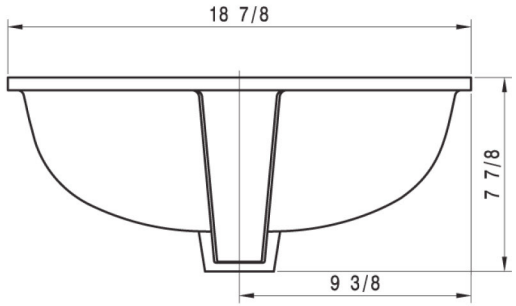

BACK
VIEW

HUTTON 17" BASIN

DRAWINGS REPRESENT ORIGINAL DESIGN SPECIFICATIONS. ACTUAL PRODUCT DIMENSIONS MY VARY SLIGHTLY.
ALL DIMENSIONS ARE REPRESENTED IN INCHES.
PROFESSIONAL INSTALLATION REQUIRED

Unless otherwise noted, all design and content, images, artwork, graphics, photography, text, and the like are copyrights, trademarks, trade dress,and/or intellectual property that are owned, controlled, or licensed by Restoration Hardware.

RESTORATION HARDWARE