TRIESTE TEAK SEATING COLLECTION

All dimensions are given in inches. See the attached "Dimensions Diagram" sheet for more information on the keys used in this chart.

RH

	OVERALL WIDTH A	OVERALL DEPTH B	OVERALL HEIGHT W/ CUSHION C	FRAME HEIGHT D	ARM HEIGHT E	ARM WIDTH F	FOOT HEIGHT G	SEAT HEIGHT W/ CUSHION H	SEAT HEIGHT (FLOOR TO FRAME) I	INSIDE SEAT WIDTH J	INSIDE SEAT DEPTH K	NUMBER OF BACK CUSHIONS	NUMBER OF SEAT CUSHIONS	WEIGHT
72" SOFA	72	34	28	24	24	1¼	7	16	7	69½	32¾	2	2	-
84" SOFA	84	34	28	24	24	1¼	7	16	7	81½	32¾	3	3	-
96" SOFA	96	34	28	24	24	1¼	7	16	7	93½	32¾	3	3	-
108" SOFA	108	34	28	24	24	1¼	7	16	7	105½	32¾	3	3	-
LOUNGE CHAIR	30½	31½	28	24	24	1¼	7	16	7	30½	32¾	1	1	-
SWIVEL LOUNGE CHAIR	30½	31½	28	24	24	1¼	7	16	7	30½	32¾	1	1	-
OTTOMAN	28	30½	16	10¼	-	-	¼	16	10¼	28	30½	-	1	-
CHAISE	27½	79½	36	10	-	-	½	13	10	27½	50¾	1	1	-
DINING ARMCHAIR	23	24	31	28	28	1	14½	18¾	15½	21	23	1	1	-

OUTDOOR SEATING DIMENSIONS DIAGRAM

See the "Dimensions Sheet" for the measurements that correspond with the letters below.

RH

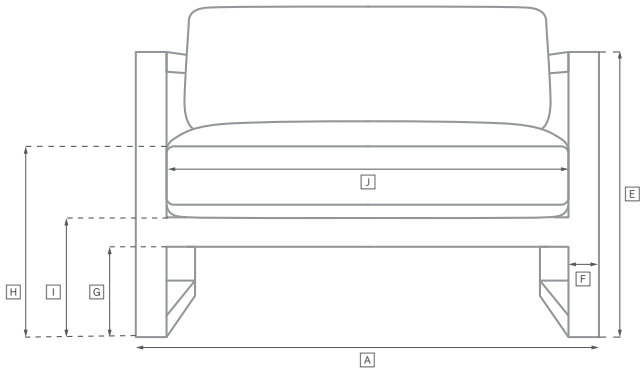

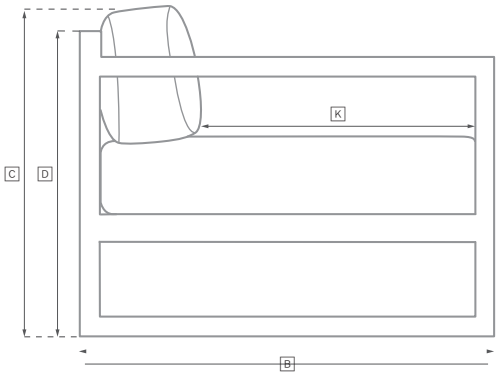

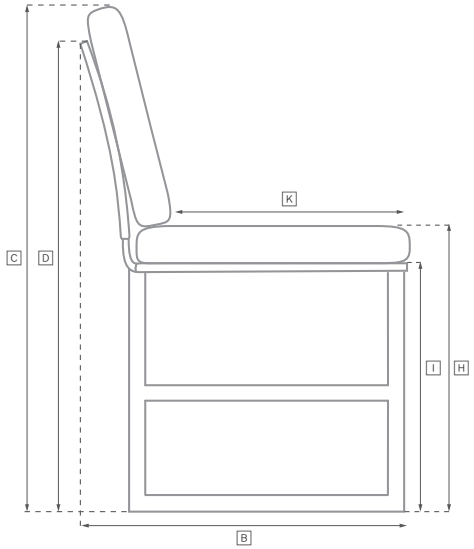

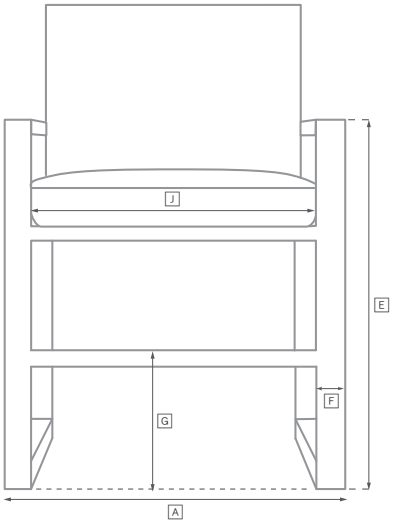

OUTDOOR SEATING DIMENSIONS DIAGRAM

See the "Dimensions Sheet" for the measurements that correspond with the letters below.

RH

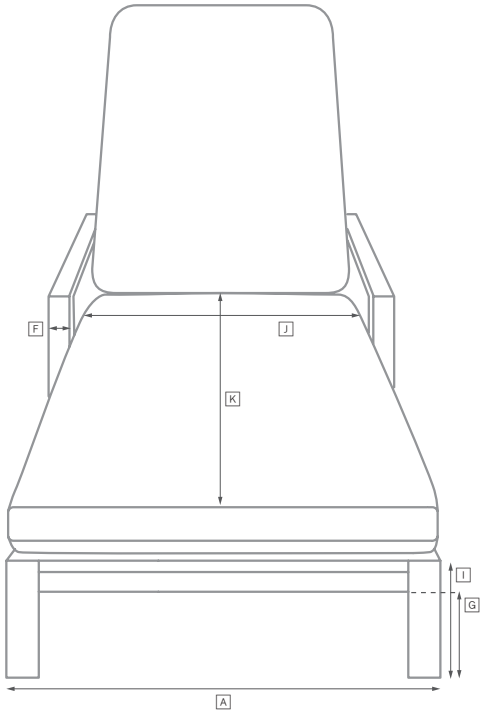

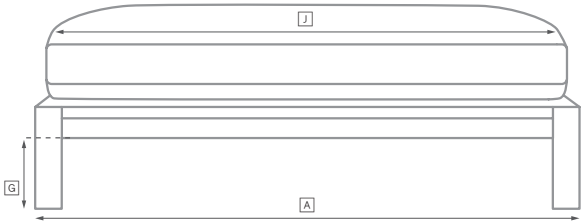

FRONT

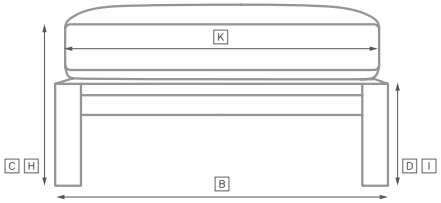
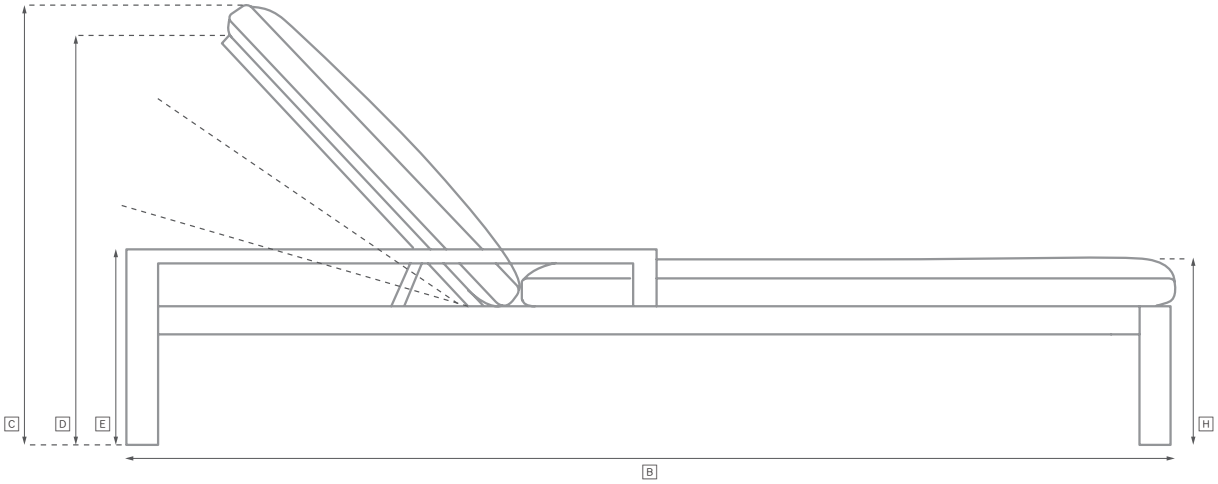
SIDE