CAICOS ALUMINUM SEATING COLLECTION

All dimensions are given in inches. See the attached “Dimensions Diagram” sheet for more information on the keys used in this chart.

RH

	OVERALL WIDTH A	OVERALL DEPTH B	OVERALL HEIGHT W/ CUSHION C	FRAME HEIGHT D	ARM HEIGHT E	ARM WIDTH F	FOOT HEIGHT G	SEAT HEIGHT W/ CUSHION H	SEAT HEIGHT (FLOOR TO FRAME) I	INSIDE SEAT WIDTH J	INSIDE SEAT DEPTH K	# OF BACK CUSHIONS	# OF SEAT CUSHIONS
ARMLESS CHAIR	39	41	28½	22	NA	NA	2	14½	6	39½	39½	2	1
RIGHT-ARM CORNER CHAIR	41	41	28½	22	NA	NA	2	14½	6	40¾	39½	2	1
LEFT-ARM CORNER CHAIR	41	41	28½	22	NA	NA	2	14½	6	40¾	39½	2	1
OTTOMAN	39	39	14½	6	NA	NA	2	14½	6	39	39	1	1
CHAISE	28	81	10	6	NA	NA	2	10	6	NA	81	NA	1

OUTDOOR SEATING DIMENSIONS DIAGRAM

See the “Dimensions Sheet” for the measurements that correspond with the letters below.

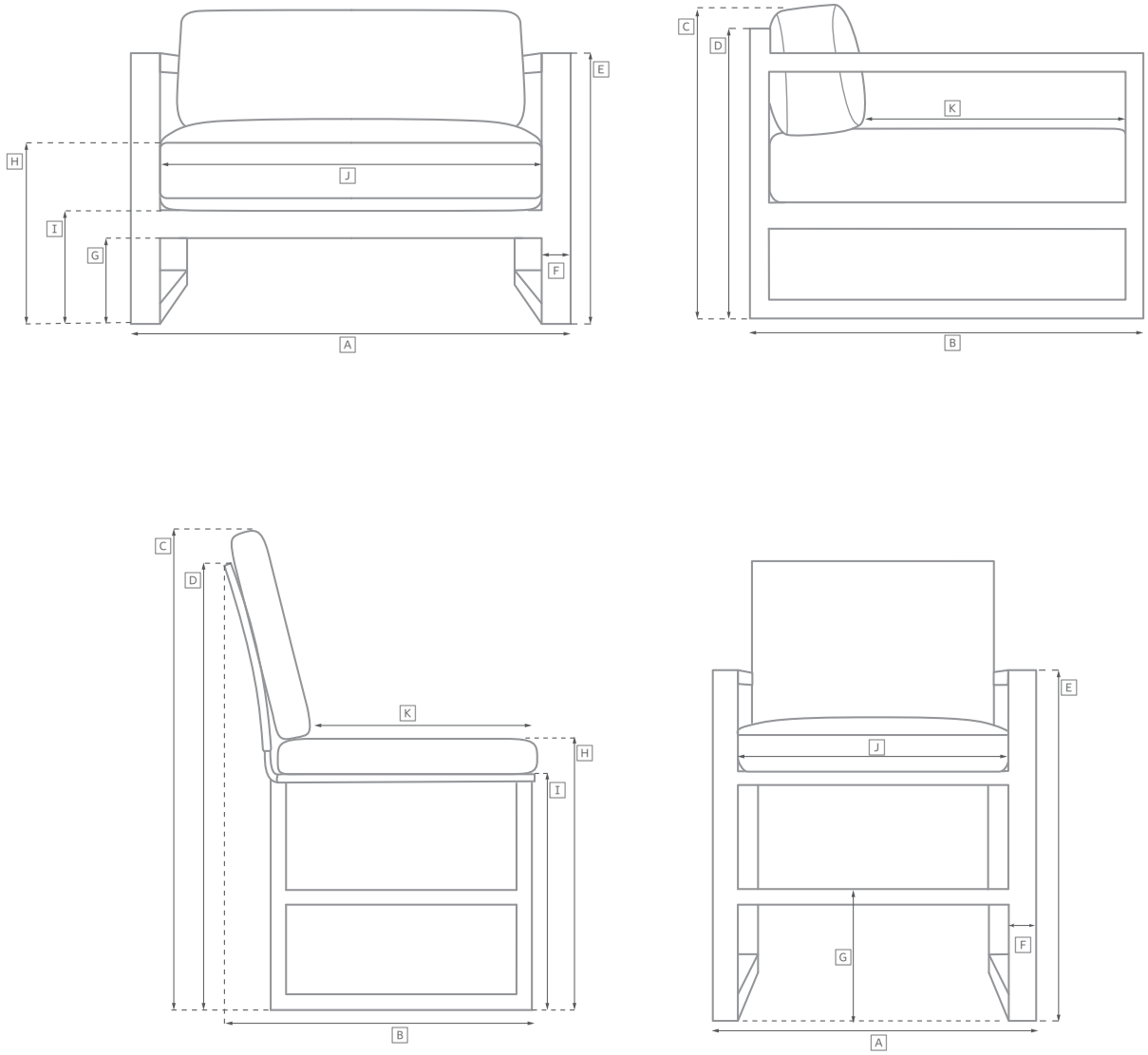

OUTDOOR SEATING DIMENSIONS DIAGRAM

See the “Dimensions Sheet” for the measurements that correspond with the letters below.

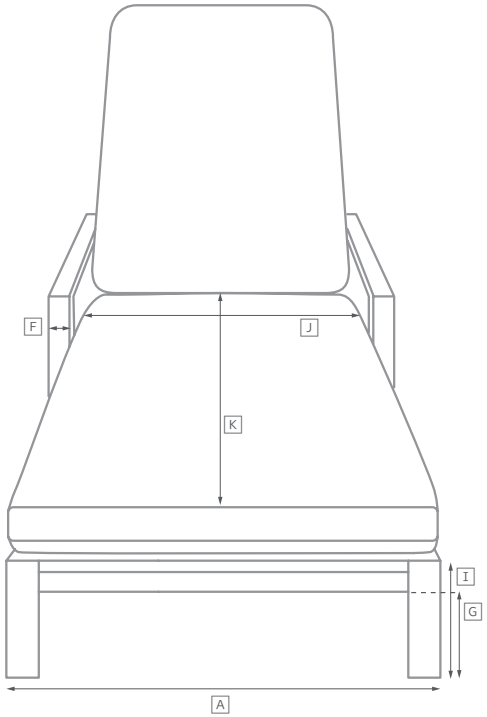

FRONT

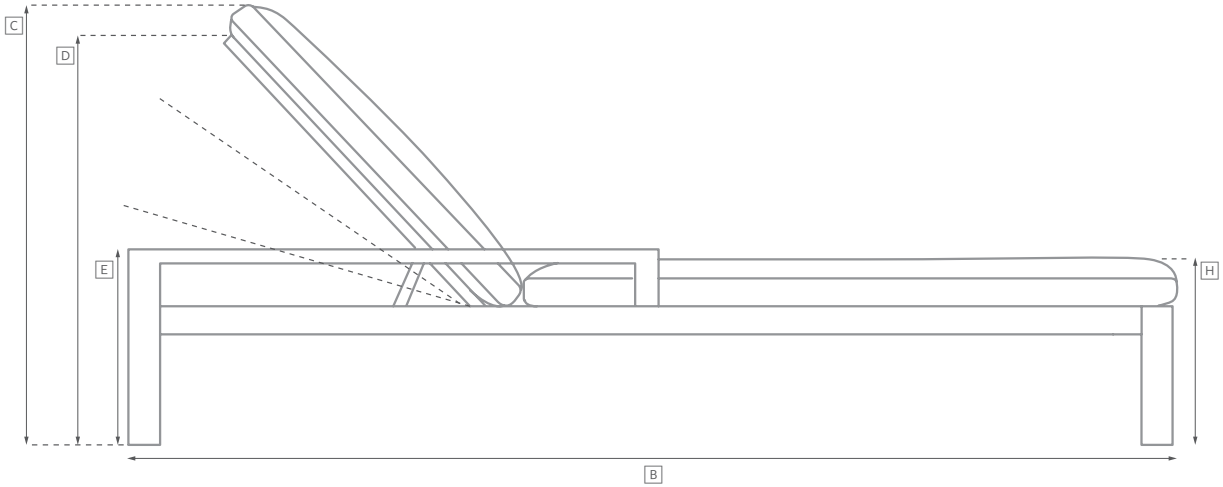

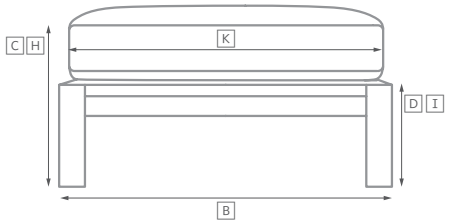

SIDE

MODULAR SOFA

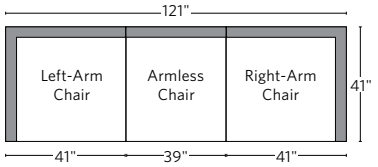

MODULAR SOFA CHAISE

Available in left and right-arm configurations.

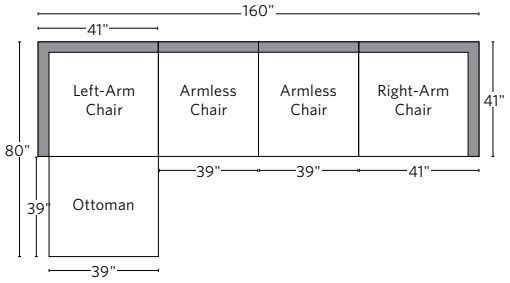

MODULAR L-SECTIONAL WITH COFFEE TABLE

Available in left and right-arm configurations.

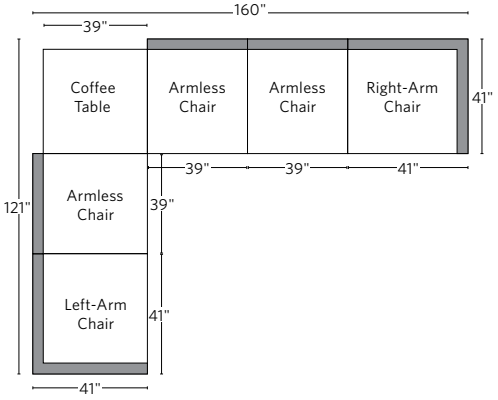

MODULAR U-CHAISE SECTIONAL

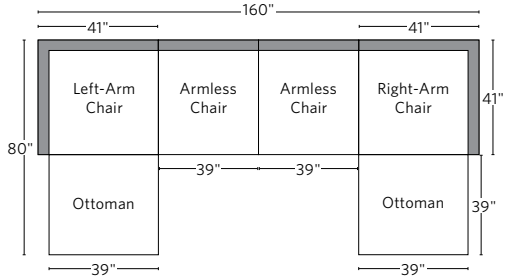

MODULAR U-SOFA SECTIONAL WITH COFFEE TABLES

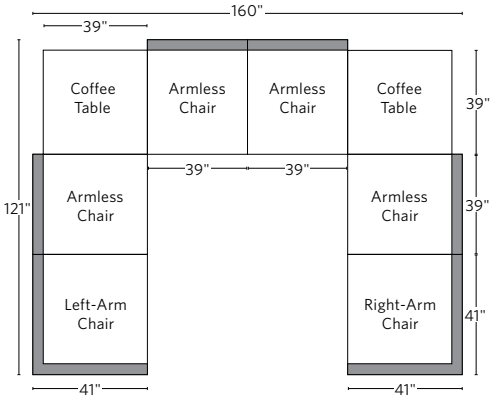

MODULAR U-SOFA CHAISE SECTIONAL

Available in left and right-arm configurations.

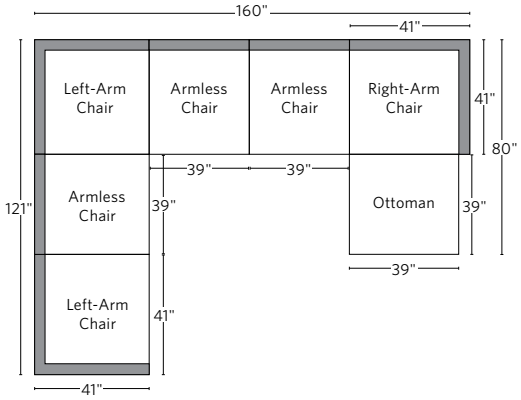

CAICOS COLLECTION
CUSTOMIZABLE MODULAR SECTIONAL

RH

MODULAR SOFA CHAISE
Available in left and right-arm configurations.

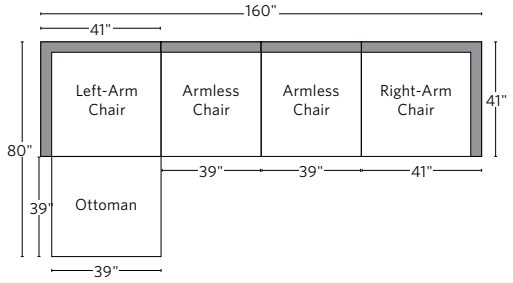

MODULAR L-SECTIONAL
Available in left and right-arm configurations.

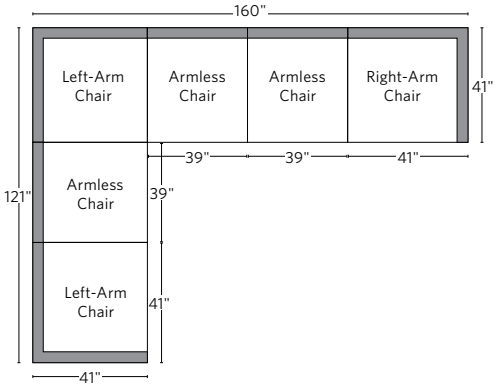
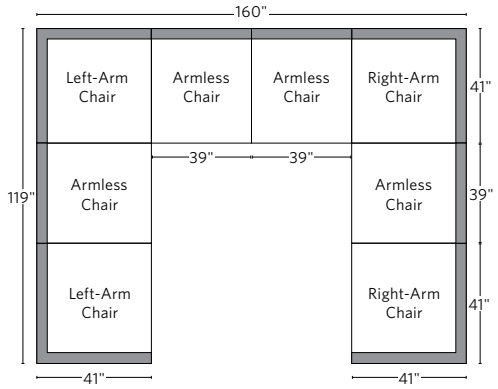
MODULAR U-SOFA SECTIONAL