MAXWELL COLLECTION

All dimensions are given in inches. See the attached “Dimensions Diagram” sheet for more information on the keys used in this chart.

RH

	OVERALL WIDTH A	OVERALL DEPTH B	OVERALL HEIGHT C	FRAME HEIGHT D	SEAT HEIGHT E	ARM HEIGHT F	FOOT HEIGHT G	SEAT HEIGHT (FLOOR TO CUSHION SEAM) H	SEAT HEIGHT (FLOOR TO FRAME) I	INSIDE SEAT WIDTH J	INSIDE SEAT DEPTH W/ BACK CUSHION K	INSIDE SEAT DEPTH W/O BACK CUSHION L	INSIDE BACK HEIGHT W/ SEAT & BACK CUSHIONS	INSIDE BACK HEIGHT W/ SEAT CUSHION M	INSIDE BACK HEIGHT W/O SEAT OR BACK CUSHION N	# OF BACK CUSHIONS	# OF SEAT CUSHIONS	ACCENT PILLOWS	REGULAR ACCENT PILLOWS DIAMETER	LARGER ACCENT PILLOW DIAMETER	ARM HEIGHT W/ SEAT CUSHION O	ARM HEIGHT W/O SEAT CUSHION P	ARM WIDTH Q	SLEEPER DEPTH OVERALL R	SLEEPER DEPTH INSIDE S
5' CLASSIC SOFA	60	40	34	30	20	22¼	2	17¼	11	46	24	29	13½	10	19	1	1	0	–	–	2¼	11¼	7	-	-
5' LUXE SOFA	60	46	34	30	20	22¼	2	17¼	11	46	30	35	14	10	19	1	1	0	–	–	2¼	11¼	7	-	-
6' CLASSIC SOFA	72	40	34	30	20	22¼	2	17¼	11	58	24	29	13½	10	19	2	2	0	–	–	2¼	11¼	7	-	-
6' LUXE SOFA	72	46	34	30	20	22¼	2	17¼	11	58	30	35	14	10	19	2	2	0	–	–	2¼	11¼	7	-	-
84" QUEEN SLEEPER SOFA	84	40	36	33½	20	23	1¾	17	12	72	23	32	16	13½	21½	2	2	0	–	–	3	11	6	85	80
7' CLASSIC SOFA	84	40	34	30	20	22¼	2	17¼	11	70	24	29	13½	10	19	2	2	0	–	–	2¼	11¼	7	-	-
7' CLASSIC THREE-SEAT-CUSHION SOFA	84	40	34	30	20	22¼	2	17¼	11	70	24	29	13½	10	19	3	3	0	–	–	2¼	11¼	7	-	-
7' LUXE SOFA	84	46	34	30	20	22¼	2	17¼	11	70	30	35	14	10	19	2	2	0	–	–	2¼	11¼	7	-	-
7' LUXE THREE-SEAT-CUSHION SOFA	84	46	34	30	20	22¼	2	17¼	11	70	30	35	14	10	19	3	3	0	–	–	2¼	11¼	7	-	-
8' CLASSIC SOFA	96	40	34	30	20	22¼	2	17¼	11	82	24	29	13½	10	19	2	2	0	–	–	2¼	11¼	7	-	-
8' CLASSIC THREE-SEAT-CUSHION SOFA	96	40	34	30	20	22¼	2	17¼	11	82	24	29	13½	10	19	3	3	0	–	–	2¼	11¼	7	-	-
8' LUXE SOFA	96	46	34	30	20	22¼	2	17¼	11	82	30	35	14	10	19	2	2	0	–	–	2¼	11¼	7	-	-
8' LUXE THREE-SEAT-CUSHION SOFA	96	46	34	30	20	22¼	2	17¼	11	82	30	35	14	10	19	3	3	0	–	–	2¼	11¼	7	-	-
96" KING SLEEPER SOFA	96	40	36	33½	20	23	1¾	17	12	84	23	32	16	13½	21½	2	2	0	–	–	3	11	6	85	80

MAXWELL COLLECTION

All dimensions are given in inches. See the attached “Dimensions Diagram” sheet for more information on the keys used in this chart.

RH

	OVERALL WIDTH A	OVERALL DEPTH B	OVERALL HEIGHT C	FRAME HEIGHT D	SEAT HEIGHT E	ARM HEIGHT F	FOOT HEIGHT G	SEAT HEIGHT (FLOOR TO CUSHION SEAM) H	SEAT HEIGHT (FLOOR TO FRAME) I	INSIDE SEAT WIDTH J	INSIDE SEAT DEPTH W/ BACK CUSHION K	INSIDE SEAT DEPTH W/O BACK CUSHION L	INSIDE BACK HEIGHT W/ SEAT & BACK CUSHIONS	INSIDE BACK HEIGHT W/ SEAT CUSHION M	INSIDE BACK HEIGHT W/O SEAT OR BACK CUSHION N	# OF BACK CUSHIONS	# OF SEAT CUSHIONS	ACCENT PILLOWS	REGULAR ACCENT PILLOWS DIAMETER	LARGER ACCENT PILLOW DIAMETER	ARM HEIGHT W/ SEAT CUSHION O	ARM HEIGHT W/O SEAT CUSHION P	ARM WIDTH Q	SLEEPER DEPTH OVERALL R	SLEEPER DEPTH INSIDE S
9' CLASSIC SOFA	108	40	34	30	20	22¼	2	17¼	11	94	24	29	13½	10	19	2	2	0	–	–	2¼	11¼	7	-	-
9' CLASSIC THREE-SEAT-CUSHION SOFA	108	40	34	30	20	22¼	2	17¼	11	94	24	29	13½	10	19	3	3	0	–	–	2¼	11¼	7	-	-
9' LUXE SOFA	108	46	34	30	20	22¼	2	17¼	11	94	30	35	14	10	19	2	2	0	–	–	2¼	11¼	7	-	-
9' LUXE THREE-SEAT-CUSHION SOFA	108	46	34	30	20	22¼	2	17¼	11	94	30	35	14	10	19	3	3	0	–	–	2¼	11¼	7	-	-
108" KING SLEEPER SOFA	108	40	36	33½	20	23	1¾	17	12	96	23	32	16	13½	21½	2	2	0	–	–	3	11	6	85	80
10' CLASSIC SOFA	120	40	34	30	20	22¼	2	17¼	11	106	24	29	13½	10	19	2	2	0	–	–	2¼	11¼	7	-	-
10' CLASSIC THREE-SEAT-CUSHION SOFA	120	40	34	30	20	22¼	2	17¼	11	106	24	29	13½	10	19	3	3	0	–	–	2¼	11¼	7	-	-
10' LUXE SOFA	120	46	34	30	20	22¼	2	17¼	11	106	30	35	14	10	19	2	2	0	–	–	2¼	11¼	7	-	-
10' LUXE THREE-SEAT-CUSHION SOFA	120	46	34	30	20	22¼	2	17¼	11	106	29	36	14	10	19	3	3	0	–	–	2¼	11¼	7	-	-
CLASSIC CHAIR	42	40	34	30	20	22¼	2	17¼	11	28	24	29	13½	10	19	1	1	0	–	–	2¼	11¼	7	-	-
LUXE CHAIR	42	46	34	30	20	22¼	2	17¼	11	28	30	35	14	10	19	1	1	0	–	–	2¼	11¼	7	-	-
CLASSIC CHAIR-AND-A-HALF	52	40	34	30	20	22¼	2	17¼	11	38	24	29	13½	10	19	1	1	0	–	–	2¼	11¼	7	-	-
LUXE CHAIR-AND-A-HALF	52	46	34	30	20	22¼	2	17¼	11	38	30	35	14	10	19	1	1	0	–	–	2¼	11¼	7	-	-
CLASSIC SWIVEL CHAIR	42	40	34	30	20	22¼	–	17¼	11	28	24	29	13½	10	19	1	1	0	–	–	2¼	11¼	7	-	-

* ALSO AVAILABLE WITH 2 SEAT CUSHIONS

MAXWELL COLLECTION

All dimensions are given in inches. See the attached “Dimensions Diagram” sheet for more information on the keys used in this chart.

RH

	OVERALL WIDTH A	OVERALL DEPTH B	OVERALL HEIGHT C	FRAME HEIGHT D	SEAT HEIGHT E	ARM HEIGHT F	FOOT HEIGHT G	SEAT HEIGHT (FLOOR TO CUSHION SEAM) H	SEAT HEIGHT (FLOOR TO FRAME) I	INSIDE SEAT WIDTH J	INSIDE SEAT DEPTH W/ BACK CUSHION K	INSIDE SEAT DEPTH W/O BACK CUSHION L	INSIDE BACK HEIGHT W/ SEAT & BACK CUSHIONS	INSIDE BACK HEIGHT W/ SEAT CUSHION M	INSIDE BACK HEIGHT W/O SEAT OR BACK CUSHION N	# OF BACK CUSHIONS	# OF SEAT CUSHIONS	ACCENT PILLOWS	REGULAR ACCENT PILLOWS DIAMETER	LARGER ACCENT PILLOW DIAMETER	ARM HEIGHT W/ SEAT CUSHION O	ARM HEIGHT W/O SEAT CUSHION P	ARM WIDTH Q	SLEEPER DEPTH OVERALL R	SLEEPER DEPTH INSIDE S
LUXE SWIVEL CHAIR	42	46	34	30	20	22¼	–	17¼	11	28	30	35	14	10	19	1	1	0	–	–	2¼	11¼	7	-	-
RECLINER CHAIR	39	38¾	37	34	21	25½	2	19	11	25	22½	29½	14	10	19	1	1	0	–	–	2¼	11¼	7	-	-
CHAISE	43	70	34	30	20	22¼	2	18	11	29	53	61	14	10	19	1	1	0	–	–	2¼	11¼	7	-	-
DAYBED	96½	60	31½	28½	18¼	21¼	2	16¼	11	86½	43¾	51¼	13¼	10¼	17½	2	2	0	–	–	3	10¼	5	-	-
CLASSIC/LUXE OTTOMAN	32	24	18½	18½	18½	–	2	17½	10	32	–	-	–	–	-	-	1	-	–	–	–	–	-	-	-
COFFEE OTTOMAN	68	40	18½	18½	18½	–	2	17½	10	68	–	-	–	–	-	-	1	-	–	–	–	–	-	-	-
5' CLASSIC ARMLESS BENCH-SEAT SOFA*	60	40	34	30	20	–	2	17¼	11	60	24	29	13½	10	19	2	1	0	–	–	–	–	-	-	-
6' CLASSIC ARMLESS BENCH-SEAT SOFA*	72	40	34	30	20	–	2	17¼	11	72	24	29	13½	10	19	2	1	0	–	–	–	–	-	-	-
6' LUXE ARMLESS BENCH-SEAT SOFA*	72	46	34	30	20	–	2	17¼	11	72	30	35	14	10	19	2	1	0	–	–	–	–	-	-	-
7' CLASSIC ARMLESS BENCH-SEAT SOFA*	84	40	34	30	20	–	2	17¼	11	84	24	29	13½	10	19	2	1	0	–	–	–	–	-	-	-
7' LUXE ARMLESS BENCH-SEAT SOFA*	84	46	34	30	20	–	2	17¼	11	84	30	35	14	10	19	2	1	0	–	–	–	–	-	-	-
8' CLASSIC ARMLESS BENCH-SEAT SOFA*	96	40	34	30	20	–	2	17¼	11	96	24	29	13½	10	19	2	1	0	–	–	–	–	-	-	-
8' LUXE ARMLESS BENCH-SEAT SOFA*	96	46	34	30	20	–	2	17¼	11	96	30	35	14	10	19	2	1	0	–	–	–	–	-	-	-
9' CLASSIC ARMLESS BENCH-SEAT SOFA*	108	40	34	30	20	–	2	17¼	11	108	24	29	13½	10	19	2	1	0	–	–	–	–	-	-	-

* ALSO AVAILABLE WITH 2 SEAT CUSHIONS

MAXWELL COLLECTION

All dimensions are given in inches. See the attached “Dimensions Diagram” sheet for more information on the keys used in this chart.

RH

	OVERALL WIDTH A	OVERALL DEPTH B	OVERALL HEIGHT C	FRAME HEIGHT D	SEAT HEIGHT E	ARM HEIGHT F	FOOT HEIGHT G	SEAT HEIGHT (FLOOR TO CUSHION SEAM) H	SEAT HEIGHT (FLOOR TO FRAME) I	INSIDE SEAT WIDTH J	INSIDE SEAT DEPTH W/ BACK CUSHION K	INSIDE SEAT DEPTH W/O BACK CUSHION L	INSIDE BACK HEIGHT W/ SEAT & BACK CUSHIONS	INSIDE BACK HEIGHT W/ SEAT CUSHION M	INSIDE BACK HEIGHT W/O SEAT OR BACK CUSHION N	# OF BACK CUSHIONS	# OF SEAT CUSHIONS	ACCENT PILLOWS	REGULAR ACCENT PILLOWS DIAMETER	LARGER ACCENT PILLOW DIAMETER	ARM HEIGHT W/ SEAT CUSHION O	ARM HEIGHT W/O SEAT CUSHION P	ARM WIDTH Q	SLEEPER DEPTH OVERALL R	SLEEPER DEPTH INSIDE S
9' LUXE ARMLESS BENCH-SEAT SOFA*	108	46	34	30	20	–	2	17¼	11	108	30	35	14	10	19	2	1	0	–	–	–	–	-	-	-
10' LUXE ARMLESS BENCH-SEAT SOFA*	120	46	34	30	20	–	2	17¼	11	120	30	35	14	10	19	2	1	0	–	–	–	–	-	-	-
5' CLASSIC LEFT-ARM BENCH-SEAT SOFA*	60	40	34	30	20	22¼	2	17¼	11	53	24	29	13½	10	19	2	1	0	–	–	2¼	11¼	7	-	-
5' CLASSIC RIGHT-ARM BENCH-SEAT SOFA*	60	40	34	30	20	22¼	2	17¼	11	53	24	29	13½	10	19	2	1	0	–	–	2¼	11¼	7	-	-
6' CLASSIC LEFT-ARM BENCH-SEAT SOFA*	72	40	34	30	20	22¼	2	17¼	11	65	24	29	13½	10	19	2	1	0	–	–	2¼	11¼	7	-	-
6' CLASSIC RIGHT-ARM BENCH-SEAT SOFA*	72	40	34	30	20	22¼	2	17¼	11	65	24	29	13½	10	19	2	1	0	–	–	2¼	11¼	7	-	-
6' LUXE LEFT-ARM BENCH-SEAT SOFA*	72	46	34	30	20	22¼	2	17¼	11	65	30	35	14	10	19	2	1	0	–	–	2¼	11¼	7	-	-
6' LUXE RIGHT-ARM BENCH-SEAT SOFA*	72	46	34	30	20	22¼	2	17¼	11	65	30	35	14	10	19	2	1	0	–	–	2¼	11¼	7	-	-
7' CLASSIC LEFT-ARM BENCH-SEAT SOFA*	84	40	34	30	20	22¼	2	17¼	11	77	24	29	13½	10	19	2	1	0	–	–	2¼	11¼	7	-	-
7' CLASSIC RIGHT-ARM BENCH-SEAT SOFA*	84	40	34	30	20	22¼	2	17¼	11	77	24	29	13½	10	19	2	1	0	–	–	2¼	11¼	7	-	-
7' LUXE LEFT-ARM BENCH-SEAT SOFA*	84	46	34	30	20	22¼	2	17¼	11	77	30	35	14	10	19	2	1	0	–	–	2¼	11¼	7	-	-
7' LUXE RIGHT-ARM BENCH-SEAT SOFA*	84	46	34	30	20	22¼	2	17¼	11	77	30	35	14	10	19	2	1	0	–	–	2¼	11¼	7	-	-
8' CLASSIC LEFT-ARM BENCH-SEAT SOFA*	96	40	34	30	20	22¼	2	17¼	11	89	24	29	13½	10	19	2	1	0	–	–	2¼	11¼	7	-	-
8' CLASSIC RIGHT-ARM BENCH-SEAT SOFA*	96	40	34	30	20	22¼	2	17¼	11	89	24	29	13½	10	19	2	1	0	–	–	2¼	11¼	7	-	-

* ALSO AVAILABLE WITH 2 SEAT CUSHIONS

MAXWELL COLLECTION

All dimensions are given in inches. See the attached “Dimensions Diagram” sheet for more information on the keys used in this chart.

RH

	OVERALL WIDTH A	OVERALL DEPTH B	OVERALL HEIGHT C	FRAME HEIGHT D	SEAT HEIGHT E	ARM HEIGHT F	FOOT HEIGHT G	SEAT HEIGHT (FLOOR TO CUSHION SEAM) H	SEAT HEIGHT (FLOOR TO FRAME) I	INSIDE SEAT WIDTH J	INSIDE SEAT DEPTH W/ BACK CUSHION K	INSIDE SEAT DEPTH W/O BACK CUSHION L	INSIDE BACK HEIGHT W/ SEAT & BACK CUSHIONS	INSIDE BACK HEIGHT W/ SEAT CUSHION M	INSIDE BACK HEIGHT W/O SEAT OR BACK CUSHION N	# OF BACK CUSHIONS	# OF SEAT CUSHIONS	ACCENT PILLOWS	REGULAR ACCENT PILLOWS DIAMETER	LARGER ACCENT PILLOW DIAMETER	ARM HEIGHT W/ SEAT CUSHION O	ARM HEIGHT W/O SEAT CUSHION P	ARM WIDTH Q	SLEEPER DEPTH OVERALL R	SLEEPER DEPTH INSIDE S
8' LUXE LEFT-ARM BENCH-SEAT SOFA*	96	46	34	30	20	22¼	2	17¼	11	89	30	35	14	10	19	2	1	0	–	–	2¼	11¼	7	-	-
8' LUXE RIGHT-ARM BENCH-SEAT SOFA*	96	46	34	30	20	22¼	2	17¼	11	89	30	35	14	10	19	2	1	0	–	–	2¼	11¼	7	-	-
9' CLASSIC LEFT-ARM BENCH-SEAT SOFA*	108	40	34	30	20	22¼	2	17¼	11	101	24	29	13½	10	19	2	1	0	–	–	2¼	11¼	7	-	-
9' CLASSIC RIGHT-ARM BENCH-SEAT SOFA*	108	40	34	30	20	22¼	2	17¼	11	101	24	29	13½	10	19	2	1	0	–	–	2¼	11¼	7	-	-
9' LUXE LEFT-ARM BENCH-SEAT SOFA*	108	46	34	30	20	22¼	2	17¼	11	101	30	35	14	10	19	2	1	0	–	–	2¼	11¼	7	-	-
9' LUXE RIGHT-ARM BENCH-SEAT SOFA*	108	46	34	30	20	22¼	2	17¼	11	101	30	35	14	10	19	2	1	0	–	–	2¼	11¼	7	-	-
10' LUXE LEFT-ARM BENCH-SEAT SOFA*	120	46	34	30	20	22¼	2	17¼	11	113	30	35	14	10	19	2	1	0	–	–	2¼	11¼	7	-	-
10' LUXE RIGHT-ARM BENCH-SEAT SOFA*	120	46	34	30	20	22¼	2	17¼	11	113	30	35	14	10	19	2	1	0	–	–	2¼	11¼	7	-	-
7' CLASSIC LEFT-ARM RETURN BENCH-SEAT SOFA*	84	40	34	30	20	22¼	2	17¼	11	67	24	29	13½	10	19	3	1	0	–	–	2¼	11¼	7	-	-
7' CLASSIC RIGHT-ARM RETURN BENCH-SEAT SOFA*	84	40	34	30	20	22¼	2	17¼	11	67	24	29	13½	10	19	3	1	0	–	–	2¼	11¼	7	-	-
7' LUXE LEFT-ARM RETURN BENCH-SEAT SOFA*	84	46	34	30	20	22¼	2	17¼	11	68	30	35	14	10	19	3	1	0	–	–	2¼	11¼	7	-	-
7' LUXE RIGHT-ARM RETURN BENCH-SEAT SOFA*	84	46	34	30	20	22¼	2	17¼	11	68	30	35	14	10	19	3	1	0	–	–	2¼	11¼	7	-	-
8' CLASSIC LEFT-ARM RETURN BENCH-SEAT SOFA*	96	40	34	30	20	22¼	2	17¼	11	79	24	29	13½	10	19	3	1	0	–	–	2¼	11¼	7	-	-
8' CLASSIC RIGHT-ARM RETURN BENCH-SEAT SOFA*	96	40	34	30	20	22¼	2	17¼	11	79	24	29	13½	10	19	3	1	0	–	–	2¼	11¼	7	-	-

* ALSO AVAILABLE WITH 2 SEAT CUSHIONS

MAXWELL COLLECTION

All dimensions are given in inches. See the attached “Dimensions Diagram” sheet for more information on the keys used in this chart.

RH

	OVERALL WIDTH A	OVERALL DEPTH B	OVERALL HEIGHT C	FRAME HEIGHT D	SEAT HEIGHT E	ARM HEIGHT F	FOOT HEIGHT G	SEAT HEIGHT (FLOOR TO CUSHION SEAM) H	SEAT HEIGHT (FLOOR TO FRAME) I	INSIDE SEAT WIDTH J	INSIDE SEAT DEPTH W/ BACK CUSHION K	INSIDE SEAT DEPTH W/O BACK CUSHION L	INSIDE BACK HEIGHT W/ SEAT & BACK CUSHIONS	INSIDE BACK HEIGHT W/ SEAT CUSHION M	INSIDE BACK HEIGHT W/O SEAT OR BACK CUSHION N	# OF BACK CUSHIONS	# OF SEAT CUSHIONS	ACCENT PILLOWS	REGULAR ACCENT PILLOWS DIAMETER	LARGER ACCENT PILLOW DIAMETER	ARM HEIGHT W/ SEAT CUSHION O	ARM HEIGHT W/O SEAT CUSHION P	ARM WIDTH Q	SLEEPER DEPTH OVERALL R	SLEEPER DEPTH INSIDE S
8' LUXE LEFT-ARM RETURN BENCH-SEAT SOFA*	96	46	34	30	20	22¼	2	17¼	11	80	30	35	14	10	19	3	1	0	–	–	2¼	11¼	7	-	-
8' LUXE RIGHT-ARM RETURN BENCH-SEAT SOFA*	96	46	34	30	20	22¼	2	17¼	11	80	30	35	14	10	19	3	1	0	–	–	2¼	11¼	7	-	-
9' CLASSIC LEFT-ARM RETURN BENCH-SEAT SOFA*	108	40	34	30	20	22¼	2	17¼	11	91	24	29	13½	10	19	3	1	0	–	–	2¼	11¼	7	-	-
9' CLASSIC RIGHT-ARM RETURN BENCH-SEAT SOFA*	108	40	34	30	20	22¼	2	17¼	11	91	24	29	13½	10	19	3	1	0	–	–	2¼	11¼	7	-	-
9' LUXE LEFT-ARM RETURN BENCH-SEAT SOFA*	108	46	34	30	20	22¼	2	17¼	11	92	30	35	14	10	19	3	1	0	–	–	2¼	11¼	7	-	-
9' LUXE RIGHT-ARM RETURN BENCH-SEAT SOFA*	108	46	34	30	20	22¼	2	17¼	11	92	30	35	14	10	19	3	1	0	–	–	2¼	11¼	7	-	-
10' CLASSIC LEFT-ARM RETURN BENCH-SEAT SOFA*	120	40	34	30	20	22¼	2	17¼	11	103	24	29	13½	10	19	3	1	0	–	–	2¼	11¼	7	-	-
10' CLASSIC RIGHT-ARM RETURN BENCH-SEAT SOFA*	120	40	34	30	20	22¼	2	17¼	11	103	24	29	13½	10	19	3	1	0	–	–	2¼	11¼	7	-	-
10' LUXE LEFT-ARM RETURN BENCH-SEAT SOFA*	120	46	34	30	20	22¼	2	17¼	11	104	30	35	14	10	19	3	1	0	–	–	2¼	11¼	7	-	-
10' LUXE RIGHT-ARM RETURN BENCH-SEAT SOFA*	120	46	34	30	20	22¼	2	17¼	11	104	30	35	14	10	19	3	1	0	–	–	2¼	11¼	7	-	-
CLASSIC LEFT-ARM CHAISE	32	70	34	30	20	22¼	2	17¼	11	25	54	61	13½	10	19	1	1	0	–	–	2¼	11¼	7	-	-
CLASSIC RIGHT-ARM CHAISE	32	70	34	30	20	22¼	2	17¼	11	25	54	61	13½	10	19	1	1		–	–	2¼	11¼	7	-	-
LUXE LEFT-ARM CHAISE	38	70	34	30	20	22¼	2	17¼	11	31	53	61	14	10	19	1	1		–	–	2¼	11¼	7	-	-
LUXE RIGHT-ARM CHAISE	38	70	34	30	20	22¼	2	17¼	11	31	53	61	14	10	19	1	1		–	–	2¼	11¼	7	-	-

* ALSO AVAILABLE WITH 2 SEAT CUSHIONS

UPHOLSTERY DIMENSIONS DIAGRAM

See the "Dimensions Sheet" for the measurements that correspond with the letters below.

RH

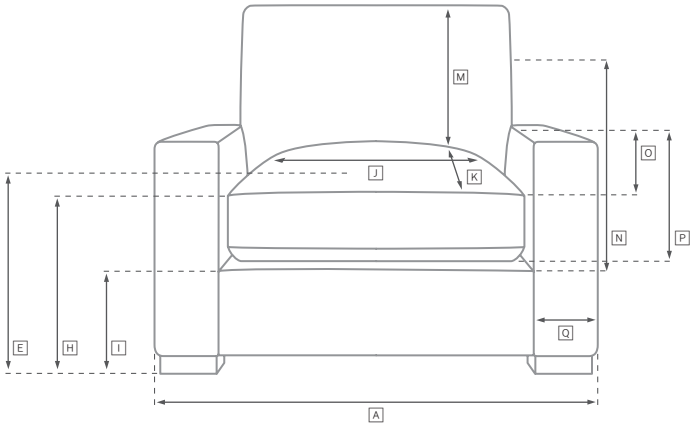

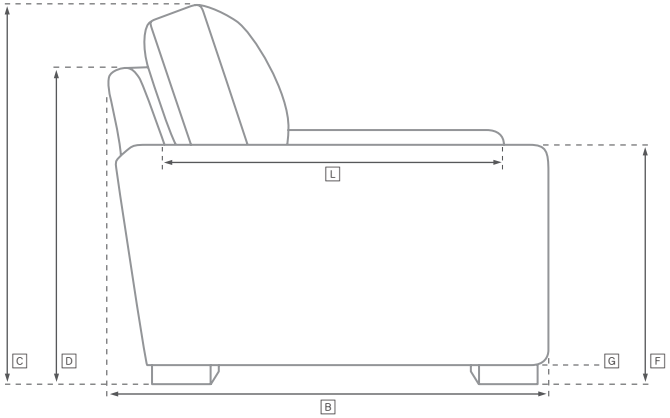

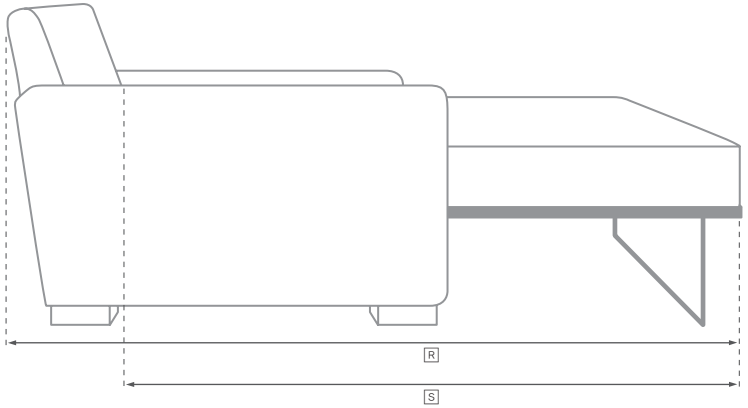

MAXWELL COLLECTION - CLASSIC DEPTH 40"

SECTIONALS BY THE FOOT

SOFA CHAISE SECTIONAL

Available in left and right-arm configurations.

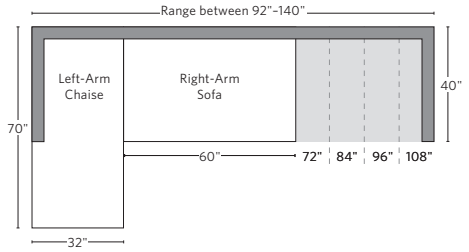

U-CHAISE SECTIONAL

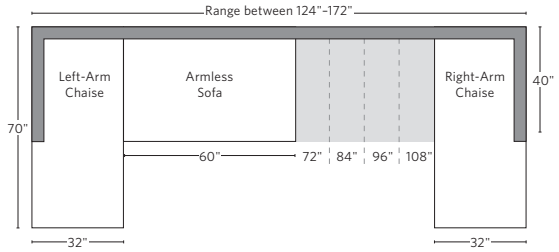

L-SECTIONAL

Available in left and right-arm configurations.

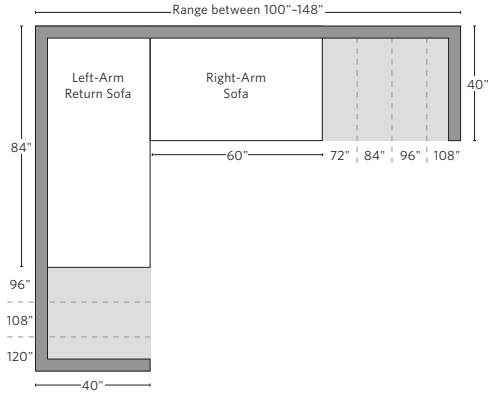

U-SOFA CHAISE SECTIONAL

Available in left and right-arm configurations.

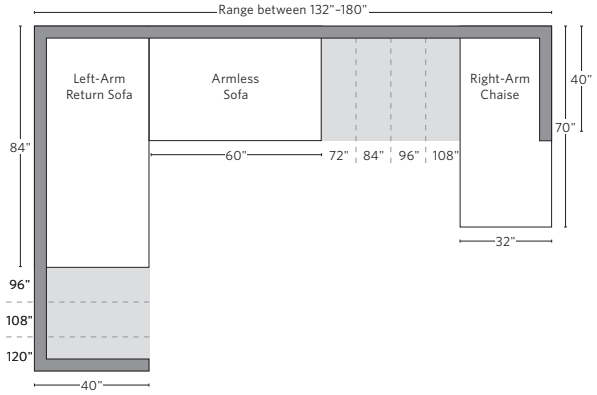

U-SOFA SECTIONAL

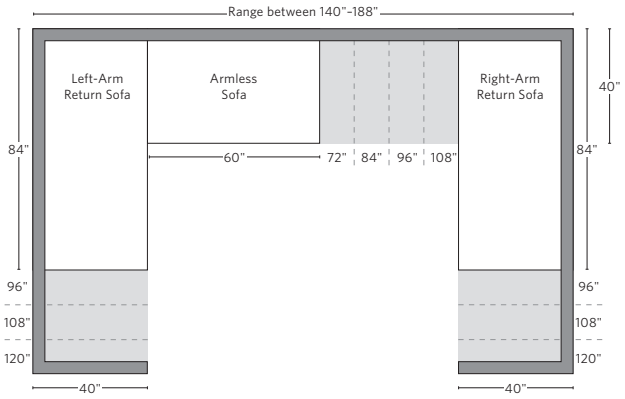

Multiple length options available.

MAXWELL COLLECTION - LUXE DEPTH 46"

SECTIONALS BY THE FOOT

RH

SOFA CHAISE SECTIONAL

Available in left and right-arm configurations.

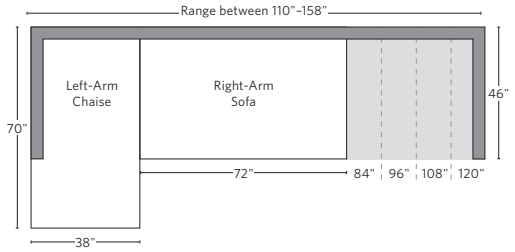

U-CHAISE SECTIONAL

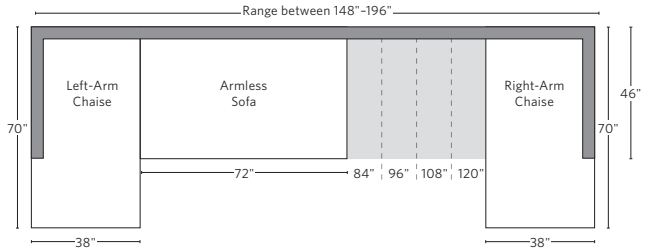

L-SECTIONAL

Available in left and right-arm configurations.

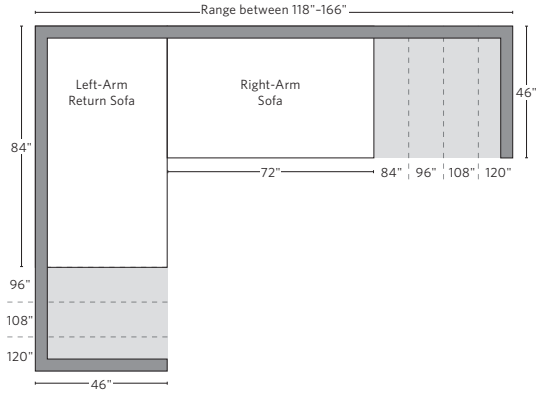

U-SOFA CHAISE SECTIONAL

Available in left and right-arm configurations.

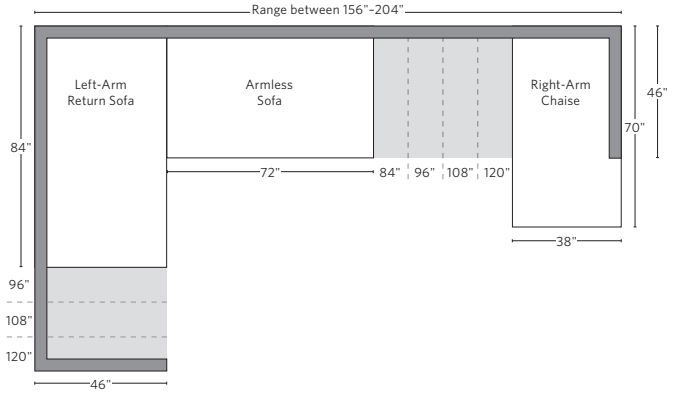

U-SOFA SECTIONAL

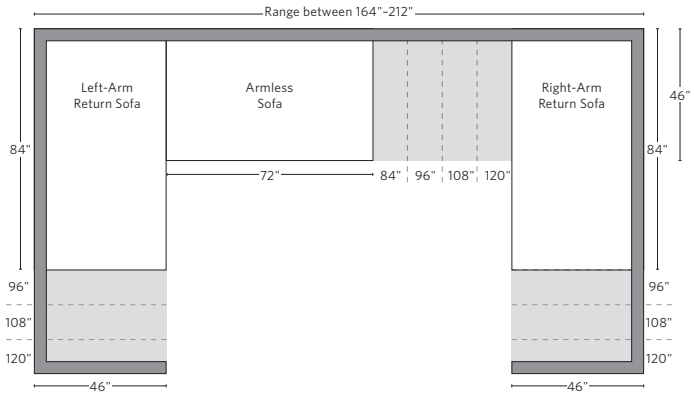

Multiple length options available.