TIBURON SEATING COLLECTION

All dimensions are given in inches. See the attached “Dimensions Diagram” sheet for more information on the keys used in this chart.

RH

	OVERALL WIDTH A	OVERALL DEPTH B	OVERALL HEIGHT W/ CUSHION C	FRAME HEIGHT D	ARM HEIGHT E	ARM WIDTH F	FOOT HEIGHT G	SEAT HEIGHT W/ CUSHION H	SEAT HEIGHT (FLOOR TO FRAME) I	INSIDE SEAT WIDTH J	INSIDE SEAT DEPTH K	# OF BACK CUSHIONS	# OF SEAT CUSHIONS
72" SOFA	72	39¾	25	23	23	6	3	12	9	60	30	1	1
96" SOFA	96	39¾	25	23	23	6	3	12	9	84	30	2	1
120" SOFA	120	39¾	25	23	23	6	3	12	9	108	30	2	1
LOUNGE CHAIR	40	39¾	25	23	23	6	3	12	9	28	30	1	1
OTTOMAN	40	26	12	9	-	-	3	12	9	40	26	-	1
COFFEE OTTOMAN	44	31	12	9	-	-	3	12	9	44	31	-	1
END-OF-SOFA OTTOMAN	39¾	39¾	12	9	-	-	3	12	9	39¾	39¾	-	1
CHAISE	28	79	40	37	-	-	3	11	9	28	49	1	1
DOUBLE CHAISE	54	79	40	37	-	-	3	11	9	54	49	2	1
TWO-SEAT ARMLESS SOFA	56	39¾	25	23	-	-	3	12	9	56	30	1	1
THREE-SEAT ARMLESS SOFA	84	39¾	25	23	-	-	3	12	9	84	30	2	1
TWO-SEAT LEFT-ARM SOFA	62	39¾	25	23	23	6	3	12	9	56	30	1	1
TWO-SEAT RIGHT-ARM SOFA	62	39¾	25	23	23	6	3	12	9	56	30	1	1
THREE-SEAT LEFT-ARM SOFA	90	39¾	25	23	23	6	3	12	9	84	30	2	1

TIBURON SEATING COLLECTION

All dimensions are given in inches. See the attached “Dimensions Diagram” sheet for more information on the keys used in this chart.

RH

	OVERALL WIDTH A	OVERALL DEPTH B	OVERALL HEIGHT W/ CUSHION C	FRAME HEIGHT D	ARM HEIGHT E	ARM WIDTH F	FOOT HEIGHT G	SEAT HEIGHT W/ CUSHION H	SEAT HEIGHT (FLOOR TO FRAME) I	INSIDE SEAT WIDTH J	INSIDE SEAT DEPTH K	# OF BACK CUSHIONS	# OF SEAT CUSHIONS
THREE-SEAT RIGHT-ARM SOFA	90	39¾	25	23	23	6	3	12	9	84	30	2	1
THREE-SEAT LEFT-ARM RETURN SOFA	100	39¾	25	23	23	6	3	12	9	84	30	3	1
THREE-SEAT RIGHT-ARM RETURN SOFA	100	39¾	25	23	23	6	3	12	9	84	30	3	1
FOUR-SEAT LEFT-ARM RETURN SOFA	128	39¾	25	23	23	6	3	12	9	112	30	3	1
FOUR-SEAT RIGHT-ARM RETURN SOFA	128	39¾	25	23	23	6	3	12	9	112	30	3	1
LEFT-ARM CHAISE	34	64¾	25	23	23	6	3	12	9	34	55	1	1
RIGHT-ARM CHAISE	34	64¾	25	23	23	6	3	12	9	34	55	1	1
DINING ARMCHAIR	24	26	26	26	26	2	13	18	16	20	21¼	-	1

OUTDOOR DIMENSIONS DIAGRAM

See the “Dimensions Sheet” for the measurements that correspond with the letters below.

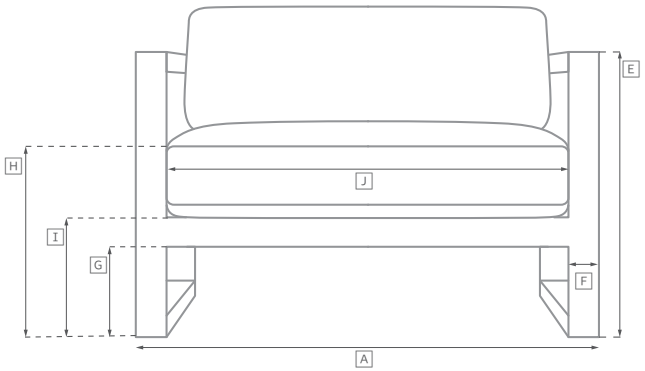

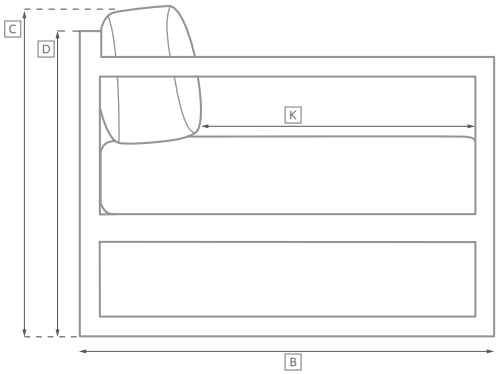

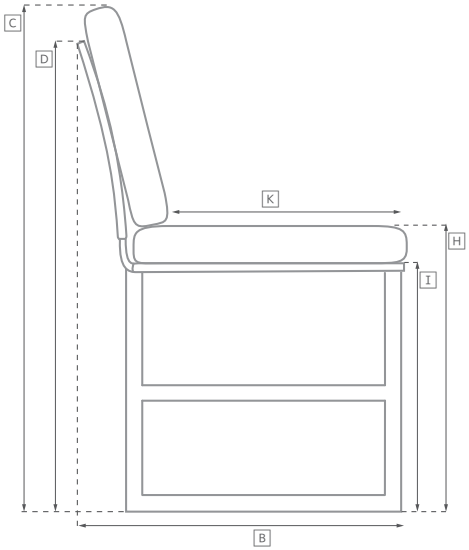

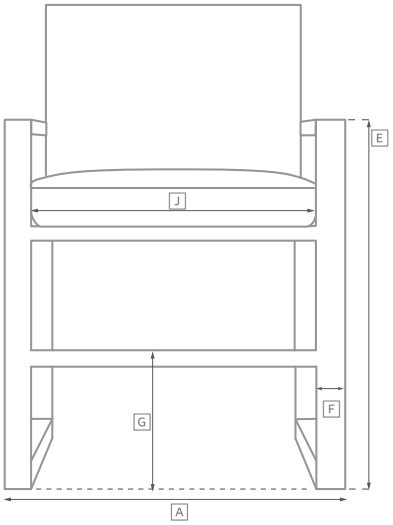

OUTDOOR DIMENSIONS DIAGRAM

See the “Dimensions Sheet” for the measurements that correspond with the letters below.

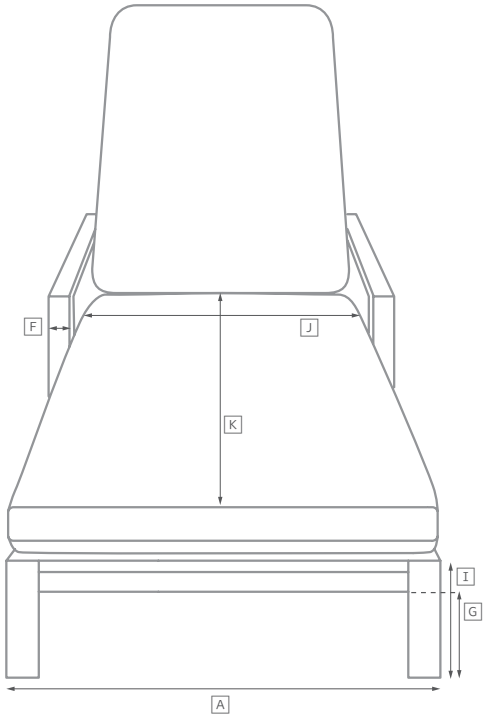

FRONT

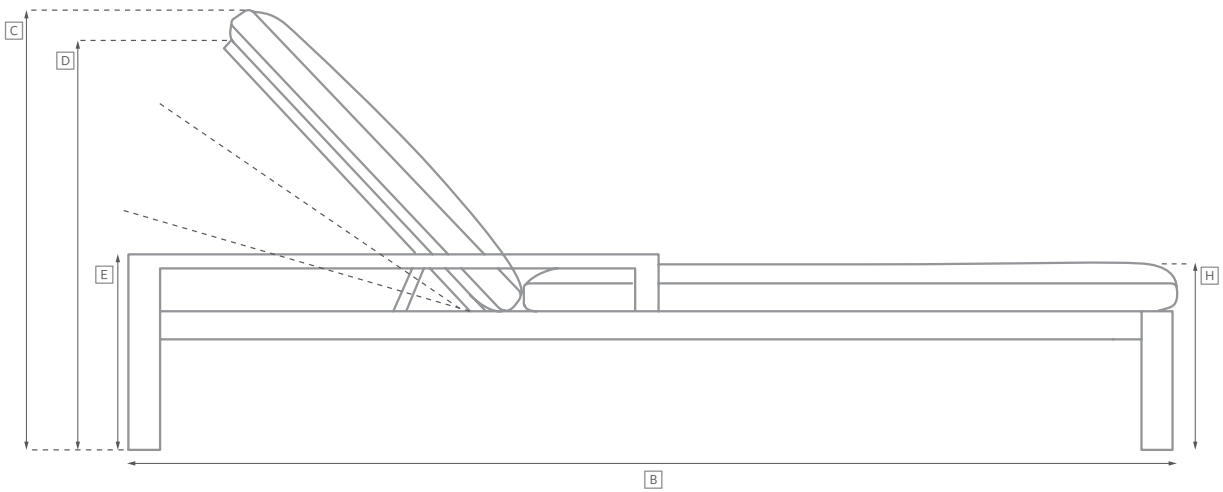

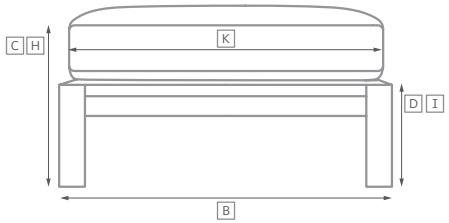

SIDE

LEFT-ARM L-SECTIONAL

128" Left-Arm L-Sectional: 128"w x 101¾"d x 23"h Overall

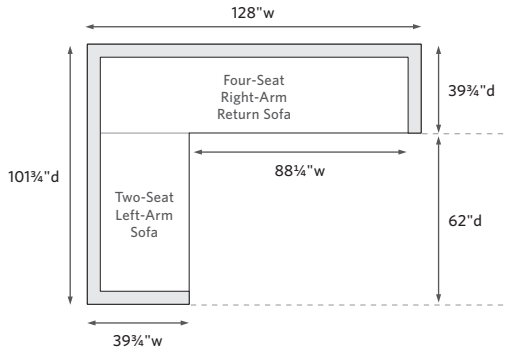

RIGHT-ARM L-SECTIONAL

128" Right-Arm L-Sectional: 128"w x 101¾"d x 23"h Overall

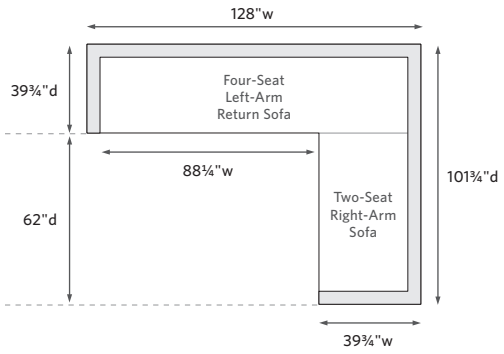

LEFT-ARM CORNER SECTIONAL

101¾" Corner Sectional: 101¾"w x 90"d x 23"h Overall

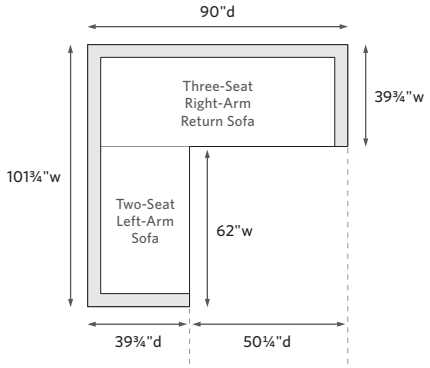

RIGHT-ARM CORNER SECTIONAL

101¾" Corner Sectional: 101¾"w x 90"d x 23"h Overall

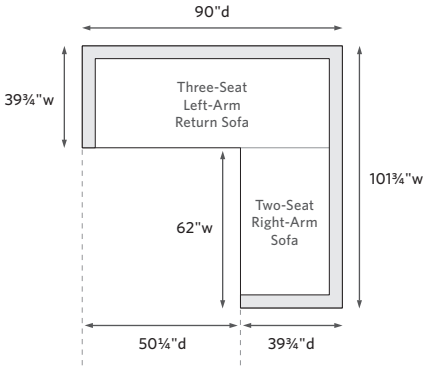

U-SOFA SECTIONAL
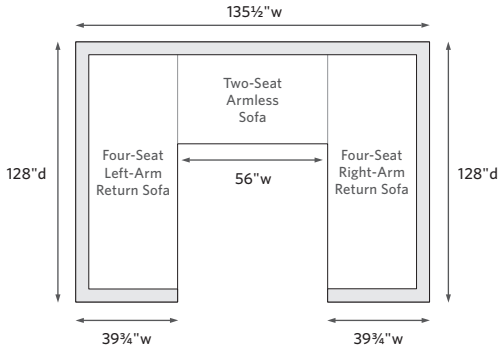
135½" U-Sofa Sectional: 135½"w x 128"d x 23"h Overall