MALTA ALUMINUM TABLE COLLECTION

All dimensions are given in inches. See the attached “Dimensions Diagram” sheet for more information on the keys used in this chart.

RH

	OVERALL LENGTH A	EXTENDED LENGTH B	OVERALL WIDTH C	OVERALL HEIGHT D	DIAMETER E	DIAMETER OF BASE F	OVERHANG AT ENDS G	OVERHANG AT SIDES H	TABLETOP THICKNESS I	APRON TO FLOOR CLEARANCE J	SPACE BETWEEN LEGS AT HEAD K	SPACE BETWEEN LEGS AT SIDE L	SEATS UP TO (APPROX. 20"W CHAIRS SPACED 2" APART)	SEATS UP TO W/ EXTENSIONS	# OF LEAVES	SIZE OF LEAVES	WEIGHT
84" RECTANGULAR DINING TABLE	84	–	39¾	30	–	–	–	–	3½	26¼	34¾	79	8	–	0	–	119
96" RECTANGULAR DINING TABLE	96	–	39¾	30	–	–	–	–	3½	26¼	34¾	90	10	–	0	–	129
108" RECTANGULAR DINING TABLE	108	–	39¾	30	–	–	–	–	3½	26¼	34¾	104	10	–	0	–	138
120" RECTANGULAR DINING TABLE	120	–	39¾	30	–	–	–	–	3½	26¼	34¾	115	12	–	0	–	154¼
48" ROUND DINING TABLE	–	–	–	30	48	–	–	–	3½	26¼	33	33	6	–	0	–	
60" ROUND DINING TABLE	–	–	–	30	60	–	–	–	3½	26¼	41	41	8	–	0	–	
72" ROUND DINING TABLE	–	–	–	30	72	–	–	–	3½	26¼	49¾	49¾	10	–	0	–	
48" COFFEE TABLE	48	–	31	12¾	–	–	–	–	2	10¾	26¼	43¾	–	–	0	–	29
60" COFFEE TABLE	60	–	31	12¾	–	–	–	–	2	10¾	26¼	55½	–	–	0	–	41
76" COFFEE TABLE	76	–	31	12¾	–	–	–	–	2	10¾	26¼	71	–	–	0	–	85
SIDE TABLE	21¼	–	21¼	16	–	–	–	–	2¾	13	17½	17¼	–	–	0	–	19

OUTDOOR DINING TABLES DIMENSIONS DIAGRAM
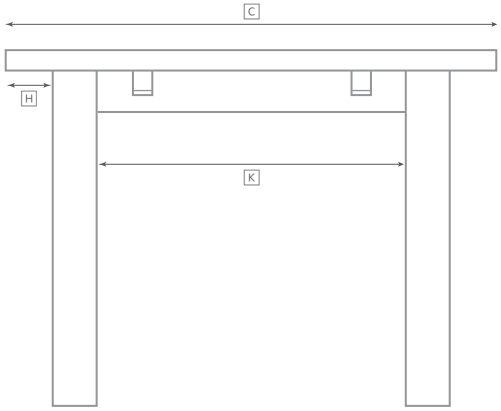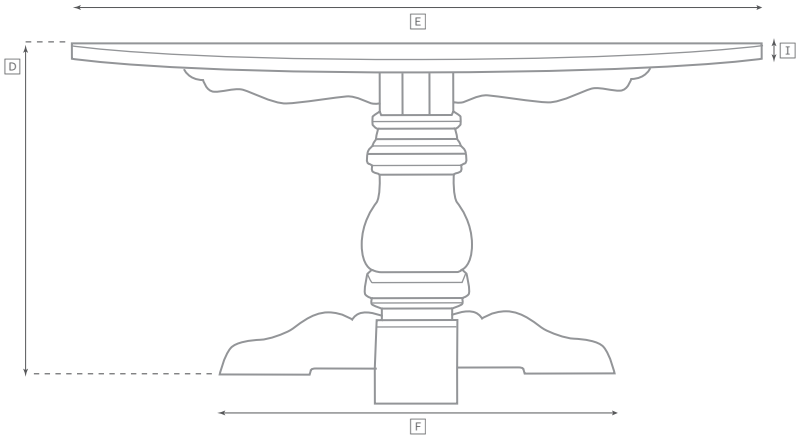
See the “Dimensions Sheet” for the measurements that correspond with the letters below.