RH

# SERRA LINEAR SCONCE

ASSEMBLY & INSTALLATION INSTRUCTIONS

**UNITED STATES ENGLISH**

## SERRA LINEAR SCONCE

### PARTS INCLUDED

(A) Wire Nuts (3)

(B) Mounting Plate (1)

(C) Mounting Screws (2)

(D) Side Screws (4)

(E) Backplate (1)

(F) Safety Cable (1)

(G) Cable Lock Nut (1)

### TOOLS NEEDED (IF APPLICABLE)

Drill

Hammer

Pencil

Level

Phillips Screwdriver

Slotted Screwdriver

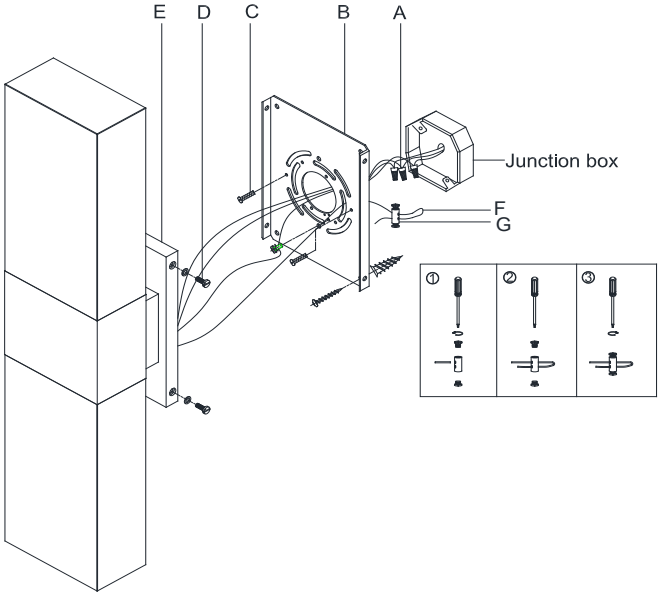

## IMPORTANT: PLEASE READ

**PLEASE FOLLOW THE ASSEMBLY INSTRUCTIONS CLOSELY. IMPROPER ASSEMBLY OR INSTALLATION CAN RESULT IN PERSONAL OR PROPERTY DAMAGE. MOUNTING HARDWARE HAS BEEN PROVIDED FOR MOUNTING TO A WOODEN STUD OR A HOLLOW GYPSUM WALL. UNIQUE OR ALTERNATIVE INSTALLATION METHODS MAY REQUIRE DIFFERENT MOUNTING HARDWARE, WHICH HAS NOT BEEN INCLUDED. ALWAYS CONSULT WITH A LICENSED ELECTRICIAN BEFORE INSTALLATION.**

**INSTALLATION BY A LICENSED ELECTRICIAN IS STRONGLY RECOMMENDED.**

### IMPORTANT SAFETY FEATURES

#### BULBS

This fixture is equipped with integrated LED panels. No bulbs are required.

#### DIMMER-SWITCH COMPATIBILITY

This fixture is dimmer-switch compatible, and may only be used with a ELV dimmer switch.

#### WALL REINFORCEMENT

Fixtures weighing 25 lb. or more will require additional wall reinforcement behind the wall where they are to be installed.

## WARNINGS

All wires are connected. When unpacking, be careful not to pull wires, as damage may result. Do not connect electricity until the fixture is fully assembled. To reduce the risk of fire, electrical shock, or personal injury, always turn off fixture and allow it to cool prior to replacing the LED panels. Do not touch or look directly at the panels when fixture is illuminated. Keep flammable materials away from lit panels.

⚠ **WARNING**: This product can expose you to lead, which is known to the State of California to cause cancer and birth defects or other reproductive harm. For more information, go to www.P65Warnings.ca.gov.

## WARNING: STRANGULATION HAZARD

Keep cord at least 3 feet away from cribs, bassinets, and toddler beds. Keep out of reach of children under 3 years of age.

**THIS PRODUCT IS NOT A TOY AND HAS NO PLAY VALUE.**

### INSTALLING SAFETY CABLE:

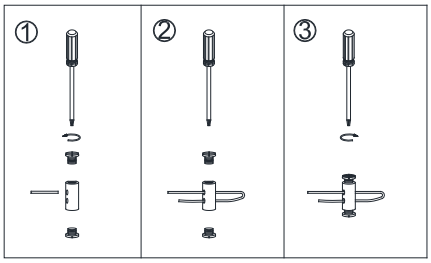


### ASSEMBLY AND INSTALLATION

## SHUT OFF THE MAIN ELECTRICAL SUPPLY FROM THE FUSE BOX OR CIRCUIT BREAKER PANEL.

1. Carefully remove all parts from the box and remove all plastic coverings.
2. Remove Mounting Plate (B) from Backplate (E) by loosening Side Screws (D).
3. Hold Mounting Plate (B) over the electrical junction box and temporarily secure with Mounting Screws (C).
4. Using a pencil, mark the 4 holes in the corners of Mounting Plate (B) on the wall. Make sure Mounting plate (B) is leveled.
5. Remove Mounting Plate (B) from the wall.
6. Attach Mounting Plate (B) to the junction box using Mounting Screws (C), then further secure using hardware appropriate for your specific application (not included).
7. Join Safety Cable (F) with the safety cable from wall.
8. Wrap both safety cables around Cable Lock Nut (G).
9. Insert screws into both holes on Cable Lock Nut (I) and secure screws with a Phillips screwdriver (not included).
10. Push Cable Lock Nut (G) into the junction box.
11. Connect the fixture ground wire (bare) with the ground wire from the junction box using a Wire Nut (A). If your house does not have ground wire, then attach this wire to the green grounding screw inside of the outlet box. IT IS IMPERATIVE THAT THIS FIXTURE BE GROUNDED.
12. Connect the fixture neutral wire (white) with the neutral wire from the junction box using a Wire Nut (A).
13. Connect the fixture hot wire (black) with the hot wire from the junction box using a Wire Nut (A). DO NOT REVERSE THE HOT AND NEUTRAL CONNECTIONS OR SAFETY WILL BE COMPROMISED.
14. Attach Backplate (E) to Mounting plate (B) and secure with Side Screws (D).
15. Installation is complete. Turn on power at fuse box or circuit breaker.

### CARE INSTRUCTIONS

Do not use polishes or cleaners on the fixture. Wipe clean with a soft, dry cloth.

## FCC COMPLIANCE:

NOTE: This equipment has been tested and found to comply with the limits for a Class B digital device, pursuant to Part 15 of the FCC Rules. These limits are designed to provide reasonable protection against harmful interference in a residential installation. This equipment generates, uses, and can radiate radio frequency energy and, if not installed and used in accordance with the instructions, may cause harmful interference to radio communications. However, there is no guarantee that interference will not occur in a particular installation. If this equipment does cause harmful interference to radio or television reception, which can be determined by turning the equipment off and on, the user is encouraged to try to correct the interference by one or more of the following measures:

- Reorient or relocate the receiving antenna.
- Increase the separation between the equipment and receiver
- Connect the equipment into an outlet on a circuit different from that to which the receiver is connected.
- Consult the dealer or an experienced radio/TV technician for help.

This device complies with Part 15 of the FCC Rules. Operation is subject to the following two conditions: (1) This device may not cause harmful interference, and (2) This device must accept any interference received, including interference that may cause undesired operation.  Caution: Changes or modifications not expressly approved by the party responsible for compliance could void the user's authority to operate the equipment.

**IC COMPLIANCE:**

This Class B digital apparatus complies with CAN ICES-005 (B) /NMB-005(B).

RESTORATION HARDWARE
15 KOCH ROAD
CORTE MADERA, CA 94925
1-800-762-1005