RH

RESTORATION HARDWARE

BEZIER POWDER VANITY SINK ASSEMBLY INSTRUCTIONS

1. Storage

    1. Keep marble top in its crate until installation.
    2. Store crate vertically in a place safe from being hit or knocked over.
    3. Do not stack anything on top of the crate.

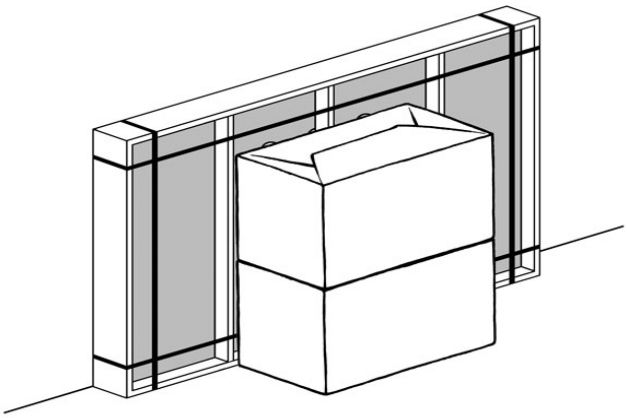

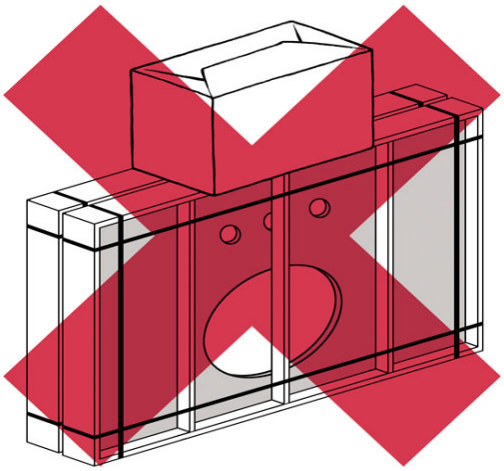

2. Opening crate

    1. Before unpacking make sure you have installation requirements present:
        1. A professional two man crew
        2. Sink base installed according to instructions with plumb wall and floor
        3. Ensure the marble top is the correct one for the base.
        4. Tools and materials required:
            1. Flat, non-abrasive work surface, such as a blanket or smooth cardboard
            2. Carpenter's level
            3. Phillips head screwdriver
            4. Sealant

    2. Carefully, without allowing any free fall, rotate the crate from vertical to flat. This is the only time the crate should be horizontal.

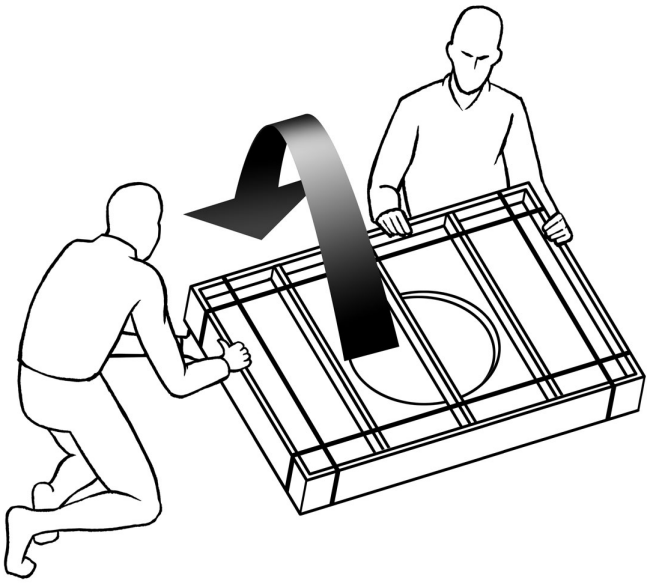

3. Remove metal bands

4. Unscrew the slats or lid and remove.

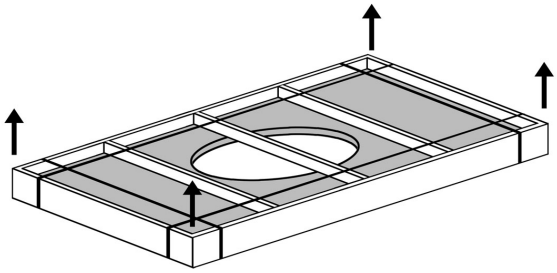

3. Examination of marble top

1. Examine the marble top for cracks or defects.

2. If defects are detected, please call 877-777-7059; do not install.

3. To clean the marble top, wipe with a soft cloth.

4. Installation of marble top

1. Always use a two man crew, a single person crew is much more likley to break or chip the marble top.

   Double tops might require a 3 man crew.

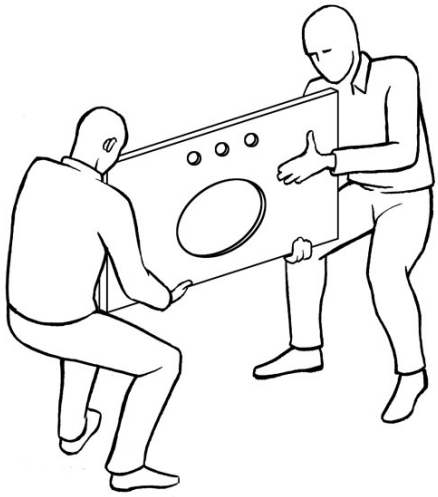

Caution! Installation between two walls requires special care.

2. Specific Instructions for installation between two walls

    1. Set top on its edge at back of counter.
    2. Lower the front of the marble top to the sink base, making sure both ends come down at the same rate.
    3. Do not shimmy, twist or turn the top as you lower it. - risk of breakage!

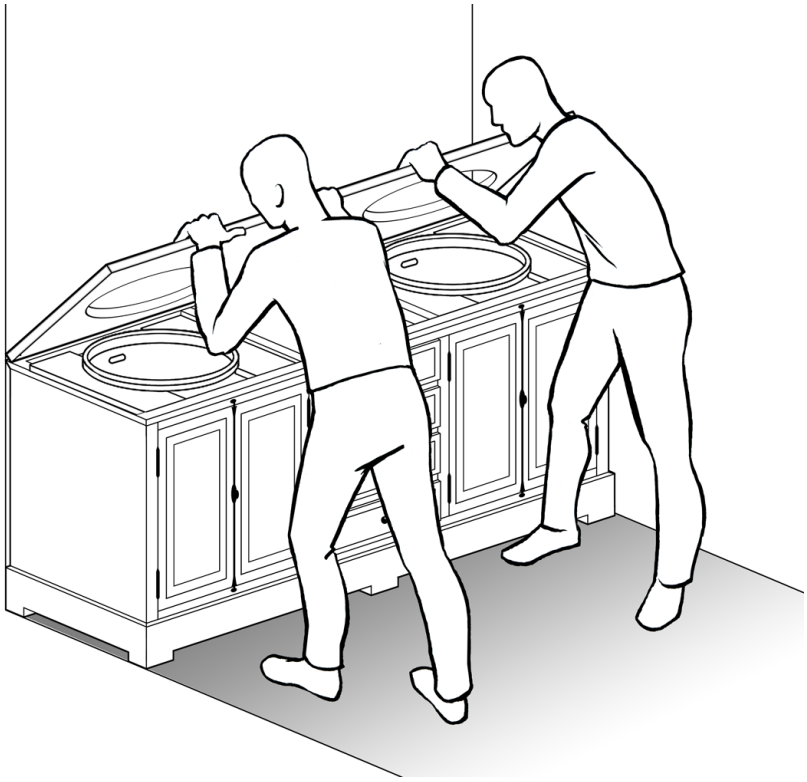

If defects are detected please call 877-777-7059 - do not install.

Before You Begin:

Professional installation by two-person crew is required for this fixture. Install water supply and drain piping according to local plumbing and building codes. Insure that wall and floor are square and plumb at site of installation.

Tools and Materials Required:

1. Flat, nonabrasive work surface such as a blanket or smooth cardboard
2. Carpenter's level
3. Sealant
4. Phillips head screwdriver

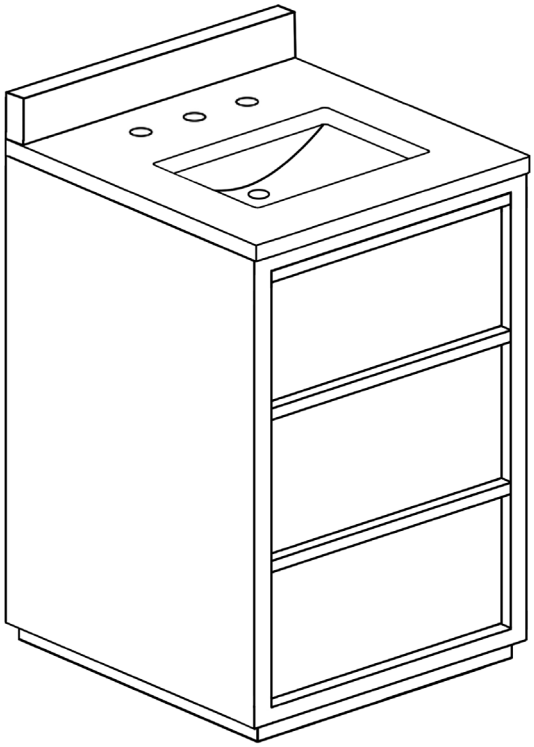

ASSEMBLED SINK

Parts List

A. Stone top (sold separately)

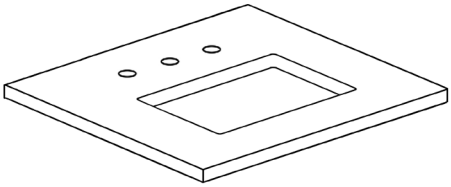

B. Backsplash (sold separately)

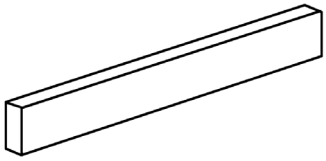

C. Lavatory basin

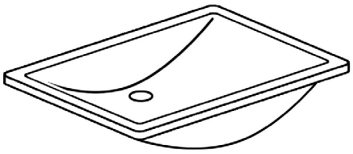

D. Vanity base

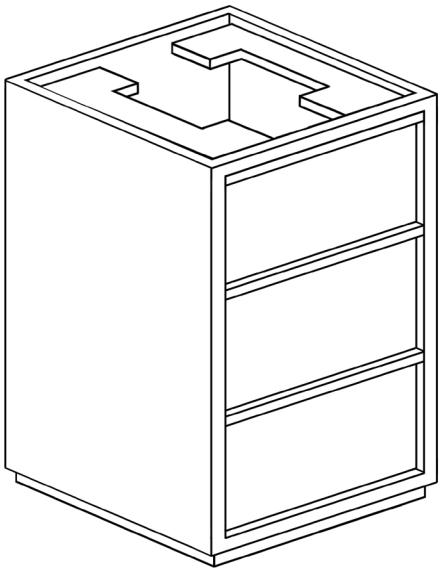

Assembly Instructions:

1. Place the basin (C) on the support bars of the vanity (D) (See Illustration). Overflow of lavatory basin should be on the same side as the pre-drilled faucet holes on the stone top.

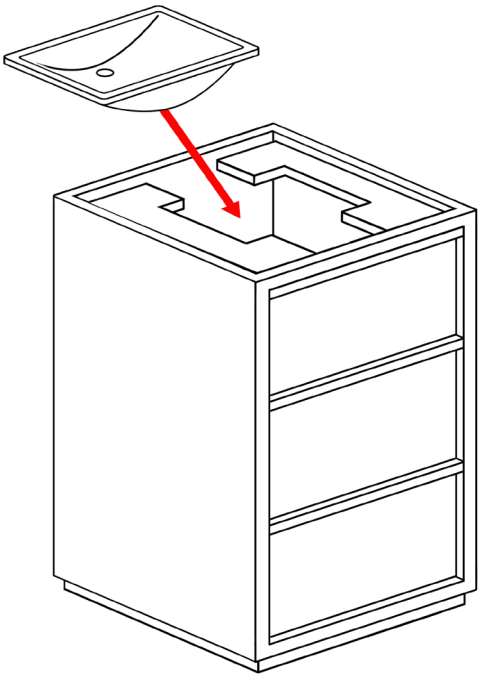

2. Apply a continuous bead of silicone to the top surface of rim of lavatory basin where it will contact underside of stone top.

3. Using two people, lift stone top (A), carefully place it in position on top of vanity base.

4. Apply silicone to bottom and back of backsplash (B) and attach to wall and marble top.
(Do not over-tighten.) Insure that lavatory basin is securely attached to stone top.

Cleaning and Maintenance Instructions:

Avoid abrasive and harsh chemical cleaners.

To maintain and protect luster of vanity sink components, Restoration Hardware Bathroom Cleaning Products are recommended.

Restoration Hardware natural stone tops have a honed finish and hand-polished edges. They are sealed twice before shipment with inert silicone sealant. For cleaning and maintenance, Restoration Hardware Stone Care Products are recommended. To maintain your natural stone top, reseal it once a year.

BEZIER
POWDER VANITY

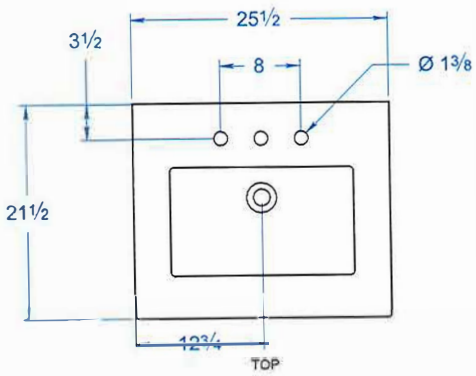

TOP

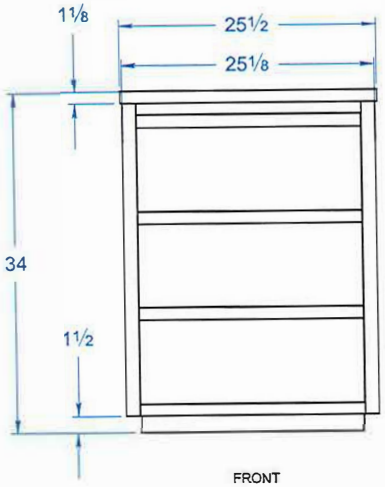

FRONT

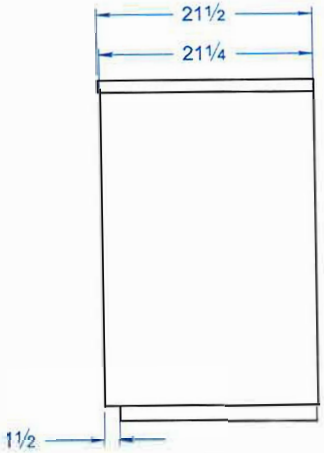

SIDE

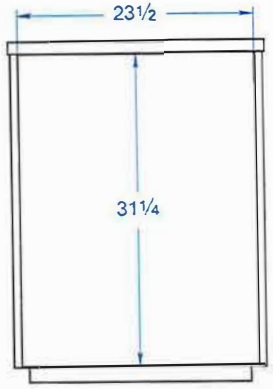

BACK

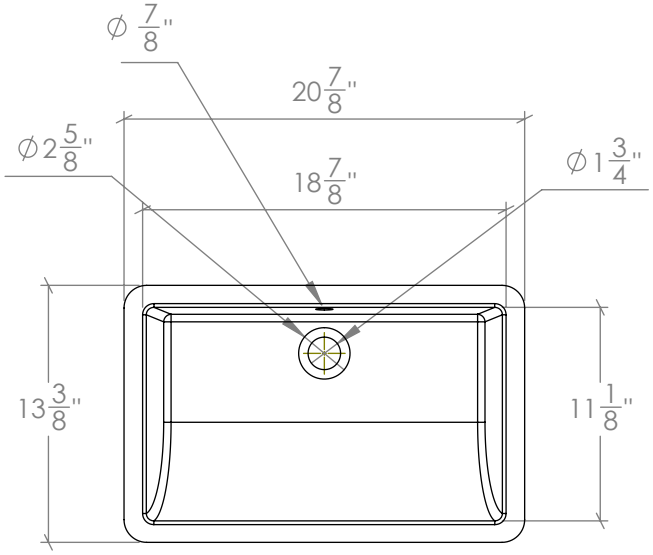

TOP VIEW

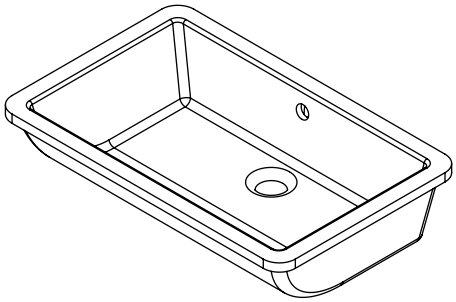

ISOMETRIC VIEW

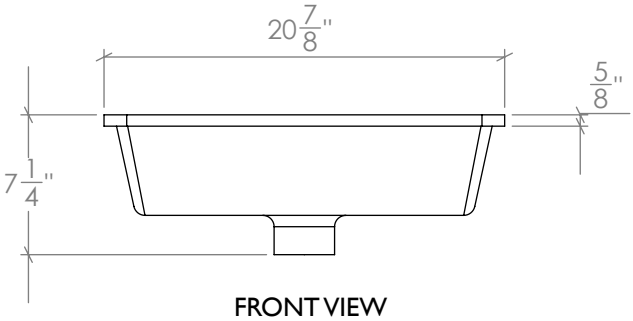

FRONT VIEW

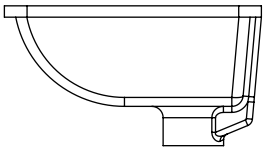

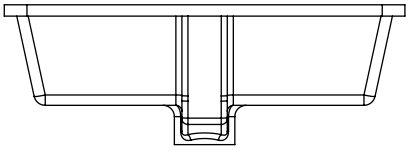

BACK VIEW

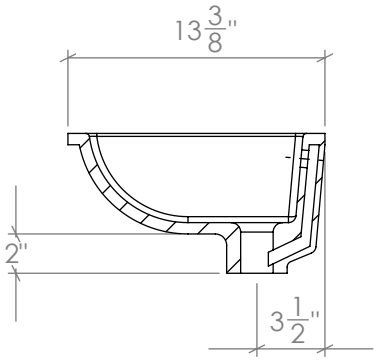

SECTION VIEW

SMALL RECTANGULAR BASIN