RH

VINTAGE BARN FLUSHMOUNT 10”

PARTS ENCLOSED

(A) Mounting Plate (1)

(B) Mounting Screws (2)

(C) Base Screws (3)

(D) Fixture Base (1)

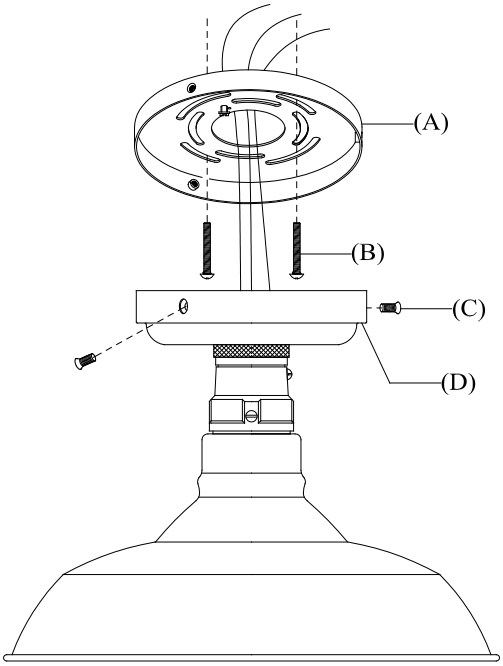

RH

VINTAGE BARN FLUSHMOUNT 10”

IMPORTANT SAFETY INSTRUCTIONS

INSTALLATION BY A LICENSED ELECTRICIAN IS STRONGLY RECOMMENDED.

This fixture has been rated for up to one (1) 60-Watt maximum Type A light bulb (not included). To avoid the risk of fire, do not exceed the recommended wattage.

WARNINGS

All wires are connected. When unpacking, be careful not to pull wires, as a bad connection may result. Do not connect electricity until your fixture is fully assembled. To reduce the risk of fire, electrical shock, or personal injury, always turn off fixture and allow it to cool prior to replacing the light bulb. Do not touch or look directly at the bulb when fixture is illuminated. Keep flammable materials away from lit bulb.

⚠ **WARNING:** This product can expose you to lead, which is known to the State of California to cause cancer and birth defects or other reproductive harm. For more information, go to www.P65Warnings.ca.gov.

THIS IS NOT A TOY AND THE PRODUCT HAS NO PLAY VALUE.

⚠ WARNING: STRANGULATION HAZARD

Keep cord at least 3 ft away from cribs, bassinets, and toddler beds. Keep out of reach of children under 3.

ASSEMBLY & INSTALLATION

SHUT OFF THE MAIN ELECTRICAL SUPPLY FROM THE FUSE BOX OR CIRCUIT BREAKER PANEL.

1. Carefully remove all parts from the box and remove all plastic covering.
2. Remove Mounting Plate (A) from Fixture Base (D) by removing Base Screws (C).
3. Affix Mounting Plate (A) to ceiling outlet box with Mounting Screws (B) provided.
4. Gently pull the wiring from the ceiling outlet box and allow the wires to hang. Thread the wires through the center hole in the Mounting Plate (A).
5. Attach the fixture ground wire and house ground wire (usually green or bare wire) to ceiling outlet box with the green grounding screw. Connect fixtures to corresponding house wire with a wire nut. Carefully tuck the wires back into the outlet box. IT IS IMPERATIVE THAT THE OUTLET BOX IN YOUR HOME BE PROPERLY GROUNDED.
6. Connect the neutral wire (ridges molded wire or white) to the neutral outlet wire (usually white) with a plastic wire connector and wrap the connection with electrical tape.
7. Connect the hot wire (smooth wire or black) to the hot outlet box wire (usually black) with a plastic wire connector and wrap the connection with electrical tape. DO NOT REVERSE THE HOT AND NEUTRAL CONNECTIONS; OTHERWISE, SAFETY WILL BE COMPROMISED.
8. Attach Fixture Base (D) to Mounting Plate (A). Tighten with Base Screws (C).
9. Insert bulb into socket.
10. Restore power to outlet box and check operation of fixture.
11. Assembly is complete.

CARE INSTRUCTIONS

Do not use polishes or cleaners on your lamp. Just wipe clean with a soft cloth.