RESTORATION HARDWARE

FILAMENT RECTANGULAR 7-LIGHT CLUSTER

PARTS ENCLOSED

(A) Plastic anchors (6)
(B) Mounting plate (1)
(C) Screws (6)
(D) Mounting screws (6)
(E) Base screws (6)
(F) Fixture base (1)
(G) Shade holders (7)
(H) Thumbscrews (21)
(J) Socket rings (7)
(K) Light bulbs (7)

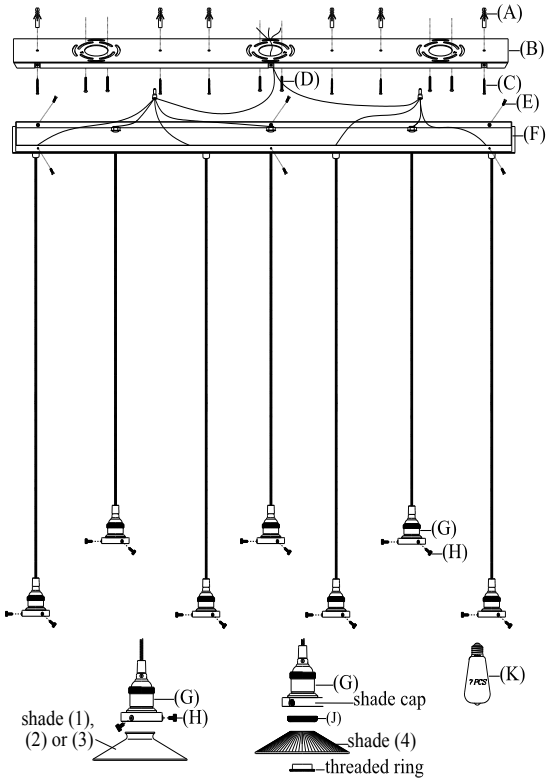

Shade Option (Ⅰ):
(1) Metal shade
(2) Mirror reflector shade
(3) White glass shade

Shade Option (Ⅱ):
(4) Ribbed glass shade

NOTE: you may shorten the hanging length of each cord by loosening the set screw on the fitting where the cord meets the canopy. Once you have set the desired length, retighten the set screw to lock the cord in place.

IMPORTANT SAFETY INSTRUCTIONS:

WE RECOMMEND INSTALLATION BY A LICENSED ELECTRICIAN.
This fixture has been rated for seven (7) 40-watt maximum TYPE A bulbs (K) (included) OR 13W Compact Fluorescent bulb (not included). To avoid the risk of fire, do not exceed the recommended wattage.

WARNINGS:

1. All wires are connected.
2. Do not remove the lamp from its packaging by pulling on the power cord, as a bad connection may result.
3. Do not connect electricity until your lamp is fully assembled.
4. To reduce the risk of fire, electrical shock, or personal injury, always turn off and unplug lamp and allow it to cool prior to replacing light bulb.
5. Do not touch bulb when fixture is turned on or look directly at lit bulb.
6. Keep flammable materials away from lit bulb.
7. This lighting fixture contains lead, a chemical known to the State of California to cause cancer, birth defects and other reproductive harm. Wash hands after installing, handling, cleaning or otherwise touching this light fixture.

TO ASSEMBLE:

1. SHUT OFF THE MAIN ELECTRICAL SUPPLY FROM THE MAIN FUSE BOX/CIRCUIT BREAKER!
2. Carefully remove all parts from the box and remove all plastic covering.
3. Remove mounting plate (B) from the fixture base (F) by unscrewing base screws (E).
4. Attach mounting plate (B) to ceiling outlet; use is as a template, make points for six mounting holes of mounting plate (B) on the ceiling. Remove mounting plate (B).
5. Drill small holes on the marked points, the holes should be big enough to accommodate with plastic anchors (A). Push plastic anchors (A) in the holes.
6. Place mounting plate (B) to ceiling outlet box by aligning the holes, inserting mounting screws (D) to ceiling outlet box and screws (C) to plastic anchors (A) to secure mounting plate (B) to the ceiling.
7. Connect ground wire from the light fixture (green) to ground wire from ceiling outlet box (usually green or copper in color). Fasten together with a plastic wire connector provided and tightly wrap the wire connector with electrical tape so the end of the connector is sealed. IT IS IMPERATIVE THAT THE OUTLET BOX IN YOUR HOME BE PROPERLY GROUNDED.
8. Connect the neutral wire (white) to the neutral outlet wire (usually white) with a plastic wire connector and wrap the connection with electrical tape.
9. Repeat the procedure with the hot (black) wire to hot (usually black) outlet wire. Always make sure that no wire strands are left outside of the connections. DO NOT REVERSE THE HOT AND NEUTRAL CONNECTIONS OTHERWISE SAFETY WILL BE COMPROMISED.
10. Attach fixture base (F) to mounting plate (B), and secure with base screws (E).
11. **You can install without any shade or install shades following.**
12. **SHADE ASSEMBLY: (All shades are not included)**
    Shade Option (I): When you using the shade (1), (2) or (3), loosen thumbscrews (H) from shade holder (G), place metal shade (1), (2) or (3) to shade holder (G) and secure with thumbscrews (H).
    Shade Option (II): If you want to use the shade (4), remove socket ring (J), place shade cap and shade (4) to shade holder (G) and secure with threaded ring provide. (Keep the socket ring (J) in case of changing back to Option (I) to use the other shades).
13. Insert recommended light bulbs (included) into sockets.
14. Restore power to outlet box and check operation of fixture.
15. Assembly is complete.

CARE INSTRUCTIONS:

Avoid the use of all polishers, cleaners, and abrasives, as they will damage the finish of your lamp. To remove dust or fingerprints, wipe gently with a soft, clean cloth.