RESTORATION HARDWARE

VAILLE CRYSTAL CHANDELIER 32

PARTS ENCLOSED

ITEMS	DIAGRAM	DESCRIPTION	QTY.
(A)		Junction Box (Not included) 50LB. MIN.FIXTURE RATED	1
(B)		Ceiling Hook	1
(C)		Mounting Screws (Not included)	2 Sets
(D1) (D2)		Canopy	1
(E1)		Collar	
(E2)	E5	Hang Straight	1
(E3)		Chain	
(E4)		Quick link	
(F)		Wire Nut	3
(G)		Candle Sleeve	12
(H)		Bulb+Spare	12+4
(I)		Body	1
(J)		Glass Bottle	1
(K)		Chainmail shade	1

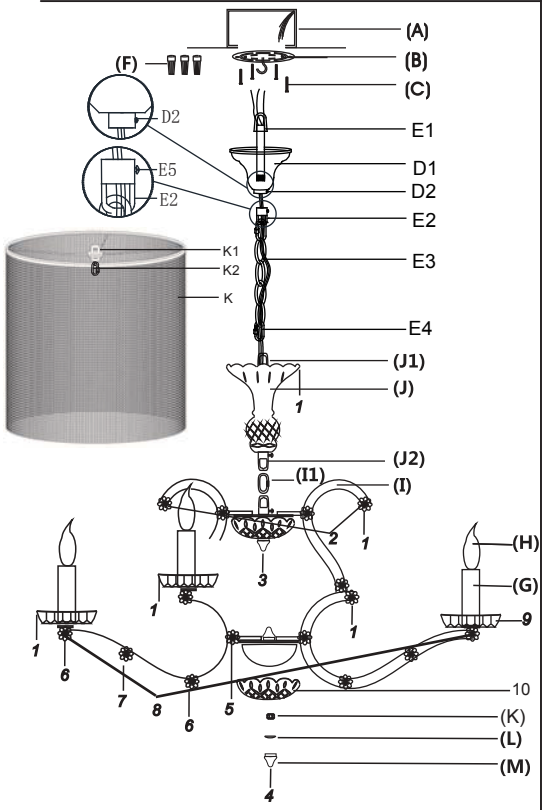

1	2	3	4	5	6	7	8	9
14mmX1po 50X30mm	14mmX11pos	40mm	14mmX8pos	14mmX8pos 63X43mm	14mmX1po 63X49mm	14mmX2pos 63X43mm	14mmX13pos 63X43mm	12PCS / 10
62PCS	4PCS	1PC	1PC	6PCS	16PCS	8PCS	8PCS	1PC

IMPORTANT SAFETY INSTRUCTIONS:

1. Use an authorized and certified electrician for consultation and installation.
2. This fixture has been rated for 12 x 25-watt maximum E12 standard bulb.
3. To avoid the risk of fire, do not exceed the recommended wattage.
4. The ceiling must have at least the capacity of 5 times the weight of the ceiling light. For this light at least a ceiling capacity of 87.5kg (192.90lb) is required.
5. The manufacturer and distributor accepts no liability for incorrect installation.
6. For indoor use only.
7. Keep away from children.

Warnings:

1. Turn-off electricity supply at main circuit panel before installing. Do not connect electricity supply until your ceiling light is fully assembled and installed.
2. All wires are connected. Do not remove the ceiling light from its packaging by pulling on the power cord, as a bad connection may result.
3. To reduce the risk of fire, electrical shock, or personal injury, always turn off the ceiling light and allow it to cool prior to replacing light bulb. Do not touch bulb when fixture is turned on or look directly at light bulb. Keep flammable materials away from light bulb.
4. Deviation from instructions may result in a risk of fire or electric shock.

PRODUCT DESCRIPTION:

General material: Chinese Crystal & Iron
Height: 72.0 cm (28.35in)
Diameter: 80.0 cm (31.50in)
Weight: 17.5 kg (38.58lb)
Grounded / Hardwired

TO ASSEMBLE:

1. Carefully remove all parts from the box and remove all plastic covering.
2. Turn OFF power to the junction box where the ceiling light will be installed.
3. Loosen the bolt (E5) of hang straight (E2) and remove the collar (E1) from the hang straight (E2) by unscrewing it. Then insert collar(E1) into canopy (D1) and re-attach collar (E1) to hang straight (E2). **Tighten the bolt (E5) of the hang straight (E2).**
4. Unlock the quick link (I1) on body (I) to attach the hang straight (J2) at the opposite end of glass bottle (J).
5. Unlock the quick link (K2) on chainmail shade (K) to attach the hang straight (J1) of glass bottle (J).
6. Unlock the quick link (E4) at the opposite end of the chain (E3) to attach the hang straight (K1) of chainmail shade (K).
7. Attach the ceiling hook (B) to the ceiling with mounting screws (C).
8. Attach end of the collar (E1) to the ceiling hook (B).
9. Connect the ground wire from the fixture to the ground junction box wire (A) (Usually the green or bare wire) and wrap the connection with electrical tape. Connect the hot wire to the hot junction box wire (A) (Usually black or smooth) with a plastic wire nut (I) and wrap the connection with electrical tape. Connect the neutral wire to the neutral junction box wire (A) (Usually white or ribbed) with a plastic wire nut (I) and wrap the connection with electrical tape.
10. Move the canopy (E1) up to the ceiling, **then fasten the bolt (E2).**
11. Loosen metal part (M) and detach round lid (L) from body (I), then loosen the nut (N) and detach from the body (I).
12. Fix glass dish (10) onto body (I), and secure with nut (N).
13. Re-attach round lid (L) to body (I) and secure with metal part (M).
14. Position glass dishes (9) and candle sleeves (G), and hang the crystals as per drawing on left.
15. Fasten lightbulbs (H) to the lampholders.
16. Restore power to the junction box and test ceiling light fixture.

CARE INSTRUCTIONS:

1. Make sure that the power is turned off and bulb has cooled before handling.
2. Wipe clean with a dry cloth / mild soapy solution. Do not use corrosive cleaners.
3. The cable/cord of this ceiling light cannot be replaced: If the cable is damaged, do not use the light.

ENVIRONMENT:

Special waste handling may be required. Please contact your local authorities for more information.