RESTORATION HARDWARE

Thank you for purchasing Restoration Hardware Lighting. Our assortment is crafted with the highest quality details in mind and each collection is clad in one of our signature finish options. Each item's surface is sealed which eliminates the need for polishing and ensures the lasting brilliance of your piece for years to come.

PARTS ENCLOSED

(A) Plastic Anchors (2)
(B) Fixture Base (1)
(C) Mounting Screws (2)
(D) Adjustment Key (1)
(E) Lamp pole (1)
(F) Thumbscrews (3)
(G) Socket (1)
(H) Glass Shade (1)

CIRCA 1900 TRAIN STATION SMALL SWING ARM SCONCE

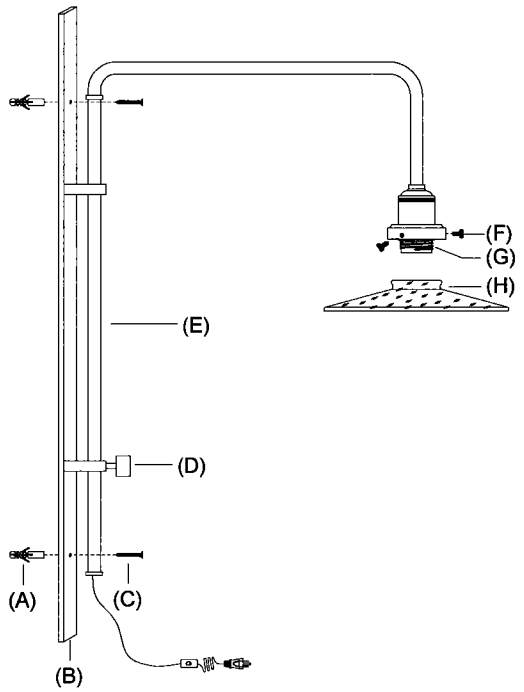

IMPORTANT SAFETY INSTRUCTIONS:

WE RECOMMEND INSTALLATION BY A LICENSED ELECTRICIAN. This fixture has been rated for up to one (1) 40-watt maximum Type A standard bulb. To avoid the risk of fire, do not exceed the recommended wattage.

WARNINGS:

1. This lighting fixture contains lead, a chemical known to the State of California to cause cancer, birth defects and other reproductive harm. Wash hands after installing, handling, cleaning or otherwise touching this light fixture.
2. Do not remove the lamp from its packaging by pulling on the power cord, as a bad connection may result.
3. Do not connect electricity until your lamp is fully assembled.
4. To reduce the risk of fire, electrical shock, or personal injury, always turn off lamp and allow it to cool prior to replacing light bulb.
5. Do not touch bulb when fixture is turned on or look directly at lit bulb.
6. Keep flammable materials away from lit bulb.

TO ASSEMBLE:

1. Carefully remove all parts from the box and remove all plastic covering.
2. Place fixture base (B) at desired location on wall. Using it as a template, mark center points for both mounting holes with a pencil. Remove fixture base (B).
3. Drill small holes on each point location on the wall, each hole should be large enough to accommodate the plastic anchors (A). Push plastic anchors (A) into the holes on the wall.
4. Attach fixture base (B) to the wall by aligning the holes with plastic anchors (A) and secure by inserting mounting screws (C) to the plastic anchors (A).
5. Loosen the thumbscrews (F) and carefully place the glass shade (H) over the socket (G) and tighten the thumbscrews (F). **Do not over-tighten, otherwise the shade may be damaged.**
6. Insert light bulb (not included) into socket.
7. Assembly is complete.

TO ADJUST LAMP HEIGHT:

1. Loosen the adjustment key (D), adjust lamp by pulling or pushing lamp pole (E) up or down to desired height.
2. Tighten the adjustment key (D).

CARE INSTRUCTIONS:

Wipe all surfaces with a soft dry cloth. Clean glass with a mild soap and water mixture. Do not use any harsh cleaners (including ammonia-based products) or abrasives, as they will damage the finish.